SPCO®

makes life easier

Sewage Pumps

50Hz

Approvals

IEC IECEE CB SCHEME

CB TEST CERTIFICATE

Ref. Certificate No. CH-5675

IEC SYSTEM FOR MUTUAL RECOGNITION OF TEST CERTIFICATES FOR ELECTRICAL EQUIPMENT (IECEE) CB SCHEME

Issued by:	Electrosuisse		
Product:	Submersible pumps		
Applicant:	Swiss Pump Company AG	Moosweg 36 CH-3645 Gwatt (Thun)	Switzerland
Manufacturer:	Swiss Pump Company AG	Moosweg 36 CH-3645 Gwatt (Thun)	Switzerland
Factory:	Swiss Pump Company AG	Moosweg 36 CH-3645 Gwatt (Thun)	Switzerland
Rating and principal characteristics:	220-240V~, 50/60Hz 3 x 220V~, 50/60Hz 3 x 400V~, 50/60Hz 3 x 460V~, 50/60Hz Power range: 0.37-30kW class I, IP68		
Trade mark (if any):	Swiss Pump Company AG (SPCO)		
Model/Type reference:	US, QF, Sewage (0.37-30kW) see appendix type list in test report		
Additional information:	—		
Sample of product tested to be in conformity with IEC:	60335-1(ed.4);am1;am2 60335-2-41(ed.3);am1;am2	National differences: EU Group Differences; EU Special National Conditions; EU A-Deviations	
Test Report Ref. No.:	06-HG-0208.01 + .02 + .03 + .06		

This CB Test Certificate is issued by the National Certification Body:

Electrosuisse
Luppmenstrasse 1,
CH-8320 Fehraltorf

electrosuisse

Signed by: Erich Obrist
2010-07-27

page 1 of 1

IQNet®

THE INTERNATIONAL CERTIFICATION NETWORK

CERTIFICATE

IQNet and SQS
hereby certify that the organisation

Swiss Pump Company AG
3645 Thun-Gwatt
Switzerland

Certified area

Whole company

Field of activity

Manufacture and sale of products for the transportation of liquids

has implemented and maintains a
Management System
which fulfills the requirements of the following standard(s)

ISO 9001:2008

Scope No(s): 17, 18, 19
Issued on: 2015-03-03
Validity date: 2018-03-02
Registration Number: ***CH-32160***

IQNet — SQS

Michael Drechsel
President of IQNet

Roland Glauser
CEO SQS

IQNet Partners*:
AENOR Spain AFNOR Certification France AIB-Vinçotte International Belgium ANCE-SIGE Mexico APCER Portugal CCC Cyprus
CSQ Italy CQC China CQM China CQS Czech Republic Cro Cert Croatia DQS Holding GmbH Germany
FCAV Brazil FONDONORMA Venezuela ICONTEC Colombia IMNC Mexico Inspecta Certification Finland IRAM Argentina
JQA Japan KFQ Korea MIRTEC Greece MSZT Hungary Nemko AS Norway NSAI Ireland PCBC Poland
Quality Austria Austria RR Russia SII Israel SIQ Slovenia SIRIM QAS International Malaysia
SQS Switzerland SRAC Romania TEST St Petersburg Russia TSE Turkey YUQS Serbia
IQNet is represented in the USA by: AFNOR Certification, CSQ, DQS Holding GmbH and NSAI Inc.
* The list of IQNet partners is valid at the time of issue of this certificate. Updated information is available under www.iqnet-certification.com

INTERNATIONAL CONFORMITY CERTIFICATION PROGRAM

CE

IEC IECEE CB SCHEME

Contents

Strong Series	page	4
GD Series		8
N Series		14
NA Series		24
MA Series		34
H Series		86
GP Series		96
SG Series		102
SW Series		116
DC Series		122
DA Series		132
DW Series		138
V Series		144
LA Series		150

Premium efficiency IE2 and IE3 motors for sewage pumps

Our commitment to energy savings:

For the last 4 years we have been redesigning the hydraulics of our machines. This is to increase their performance.

Since 2013 we started to get all of our motor and hydraulic into higher efficiency classes, implementing permanent magnet synchronous motor technology, where possible. We have always been aware concerning the energy issues and we continuously work on achieving higher premium efficiency.

Each motor is fitted for variable speed operation via inverter, which allows the performance of the entire pump to be higher and minimising operating costs.

Strong Series • Residential Sump Pumps

Power: 0.1 ~0.15 kW
Max. Head: 10.5 m
Max. Capacity: 10.2 m^3/h

Feature

- An excellent architectural design: stunning streamline design, space saving and robust.
- High capacity performance: Highly efficient 100 W and 150 W motors with low amperage providing energy savings.
- Weather-proof AAS plastics, Built-in overheat protector, IP 68 quality approved (highest submersible standard) waterproof structure, equipped with mechanical seal, oil seal, and epoxy resin sealed cable base. Durability built into design provides a longer life expectancy.
- Precise aluminum motor housing design, lash water resistance.
- New vortex design with superior performance.
- Outlet discharge is available in ½ inch, ¾ inch, and 1 inch.

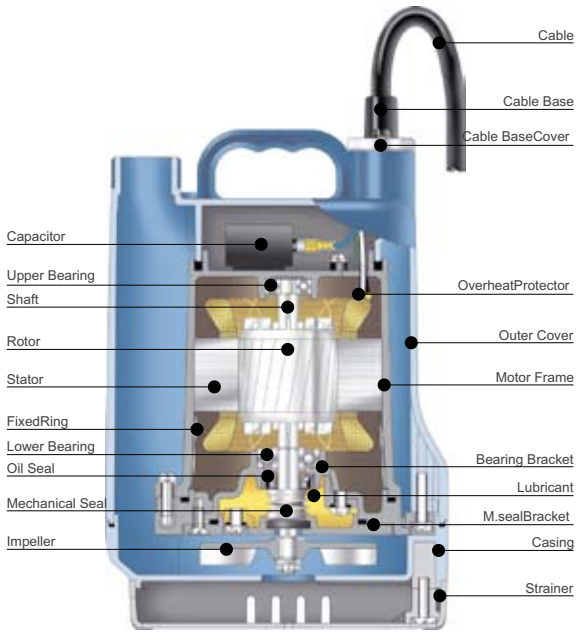

Applications

- Tank Water Circulating, Gardening, Dewatering, Water Recycles, Water Supply or Drainage. Commercial Beautification Ponds and residential Ponds.
- Note: Not suitable for seawater, strong acid or alkali liquid.

Definition of model

Strong	-	100	F
Type		watt	float

F : float switch
FV: Vertical float Switch

Strong 100A • Strong S250

Specifications

Item		Description
Limits of use	Liquid Temp	0 ~ 40 °C
	Applications	Clean / Dirty water from Sumps Basins and Tanks
	Submersion Depth	33feet (10m)
Type	Frequency	50Hz
	Motor	2P • Dry motor
	Insulation	Class B
	Protection	IP68
	Protector	Overheat Protector
	Bearing	Ball type
	M.seal	Single M.seal
	Impeller	Semi-open
Material	Outer Cover	AAS (Strong S250: PP)
	Motor Frame	ADC12 (Strong S250: SS304)
	Main Shaft	SS410
	M.seal	Carbon / Ceramic
	Casing	AAS (Strong S250: PP)
	Impeller	ABS (Strong S250: PA)
	Cable	H05RN-F or SJTW
Optional		Float switch • Vertical float switch

Strong Strong F Strong FV

PA Type
Semi open Impeller

Performance Curves

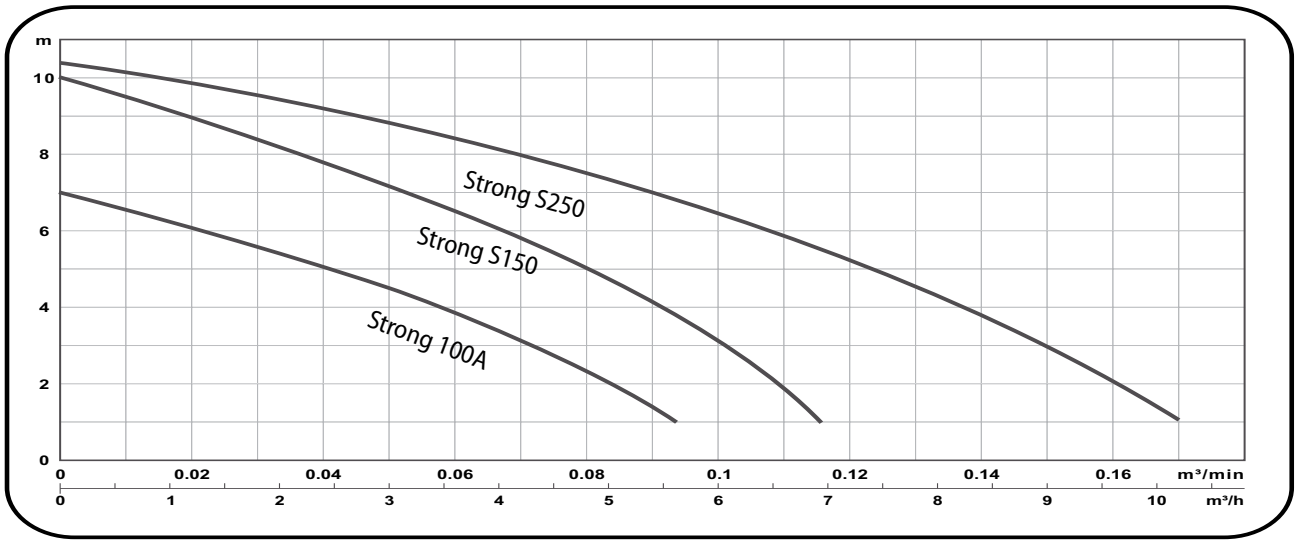

Model	Power HP (kW)	Discharge Inch (mm)	Q:m³/min	0.02	0.04	0.06	0.07	0.09	0.11	0.14	0.16
			Q:m³/h	1.2	2.4	3.6	4.2	5.4	6.6	8.4	9.6
Strong 100A	1/7 (0.1)	1" (25)	H (m)	6.2	5.1	3.7	3.1	1.4	--	--	--
Strong S150	1/5(.15)	1" (25)		9.1	8	6.5	5.6	3.5	1.3	--	--
Strong S250	1/3 (0.25)	1.25" (32)		9.9	9.2	8.4	8.1	7.0	5.8	3.9	2.0

Model	Power HP (kW)	Discharge Inch (mm)	Standard m-m³/h	Max m-m³/h	Solid Passage mm	Weight (W/O cable) 1ø kg	3ø kg	Phase Voltage	1ø 110V	1ø 220V	3ø 220V	3ø 230V
Strong 100A	1/7 (0.1)	1" (25)	4.5 - 3	7 - 6	4	3.98	--	Full Load Ampere	2.2	1.1	--	--
Strong S150	1/5(.15)	1" (25)	6.5-3.6	10-7.2	4	4.44	--		3.4	1.7	--	--
Strong S250	1/3 (0.25)	1.25" (32)	6.5 - 6	10.5 - 10.8	4	4.1	--		--	1.7	--	--

Dimensions

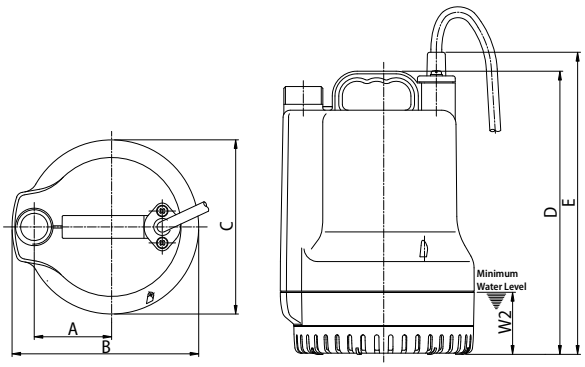

Strong 100A• Strong S150

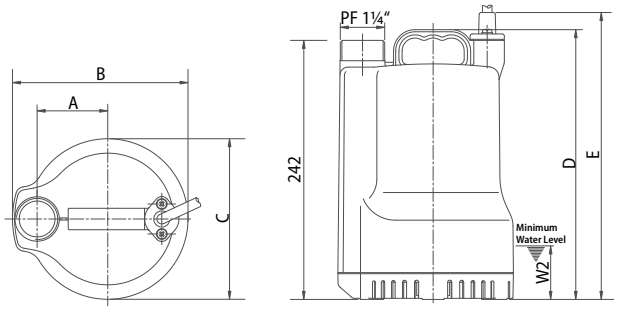

Strong S250

Model	Dimension[mm]					
	A	B	C	D	E	W2
Strong 100A	68	164	153	240	256	50
Strong S150	68	164	153	240	256	50
Strong S250	66	164	150	252	268	50

Float switch Dimensions

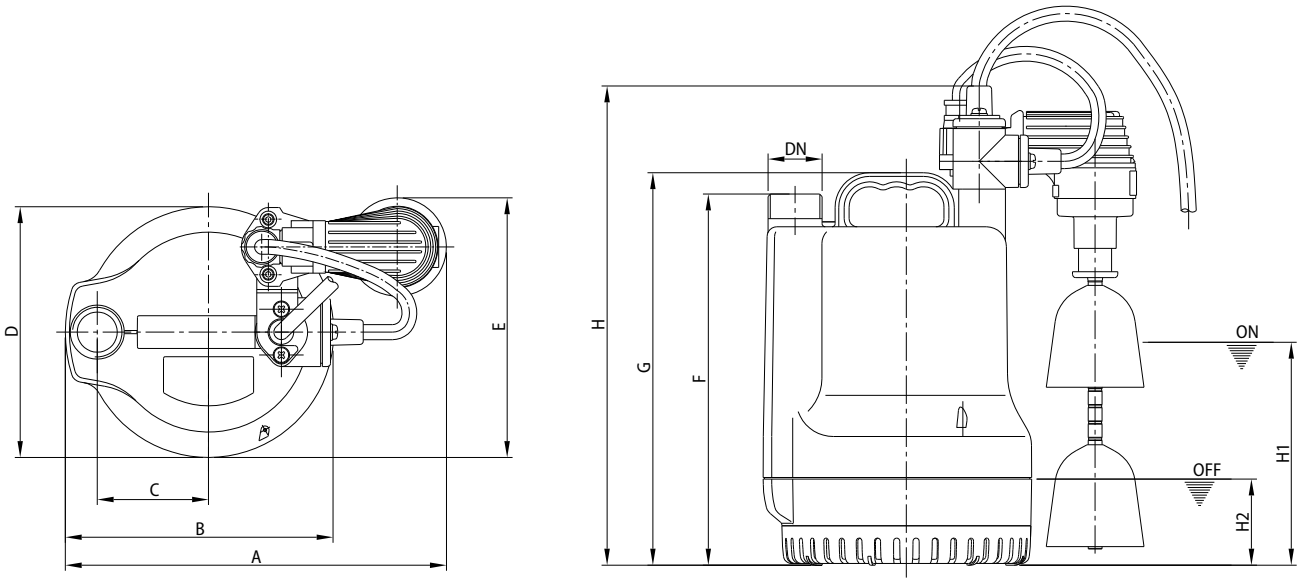

Strong 100A FV • Strong S150 FV • Strong S250 FV

Model	Dimension[mm]										
	DN	A	B	C	D	E	F	G	H	H1	H2
Strong 100A	25	233	164	68	153	160	227	240	293	135	55
Strong S150A	25	233	164	68	153	160	227	240	293	135	55
Strong S250	32	233	164	66	150	157		252	305	130	50

GDSeries • Submersible dewatering pump

Power: 0.4 ~0.75 kW
Max. Head: 11 m
Max. Capacity: 9.6 m^3/h

Feature

• The GD models are designed for the construction industry because they are lightweight, portable, and durable. The motor frame and mechanical seal bracket are made of aluminum alloy - that provides extra water cooling, to the motor, when water flows through. Features an all new design with exchangeable discharges, that are available in vertical and horizontal orientation. They also provid extra adaptability and flexibility to various conditions of installations, such as: confined spaces, 8 inch narrow wells or shallow water.

• The model is equipped with: mechanical seals (silicon carbide), epoxy resin cable, watertight body structure that meets IP68 requirements, an auto-cut motor protector, and a water-cooling motor.

• The impeller and the hydraulic components are made of a special rubber that is durable and capable of handling construction site dewatering.

• The models are available in the manual version and the automatic version - equipped with a built in floating switch to automatically switch the pump on and off.

• The impeller is made with an urethane rubber that provides extra wear-resistance on construction site dewatering.

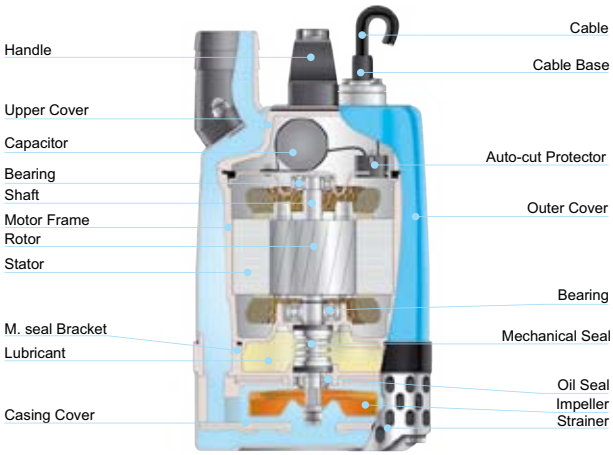

Applications

• Civil engineering, dewatering of tunneling and ground works, and for use in storm water sewers.

• Dewatering of fluids containing solids.

• Ease of mobility for use by contractors, installers and service industries.

Definition of model

GD	-	400
Type		watt

GD400 • GD750

Specifications

Item		Description
Limits of use	Liquid Temp	0 ~ 40 °C
	Applications	Construction sites/Basins dewatering
Type	Frequency	50Hz
	Motor	2P • Dry motor
	Insulation	Class B
	Protection	IP68
	Protector	Auto cut
	Bearing	Ball type
	M.seal	Double M.seal
	Impeller	Semi-open
Material	Upper cover	ADC 12
	Motor Frame	ADC 12
	Main Shaft	SUS410
	M.seal	Lower: Silicon/Silicon Upper: Carbon/Ceramic
	Casing	Synthetic Rubber
	Impeller	Urethane Rubber + SPCC
	Strainer	SUS304
	Cable	VCT or H07RN-F or SJOW/SOW
Optional		Pumps can be customized to fit specifications

Performance Curves

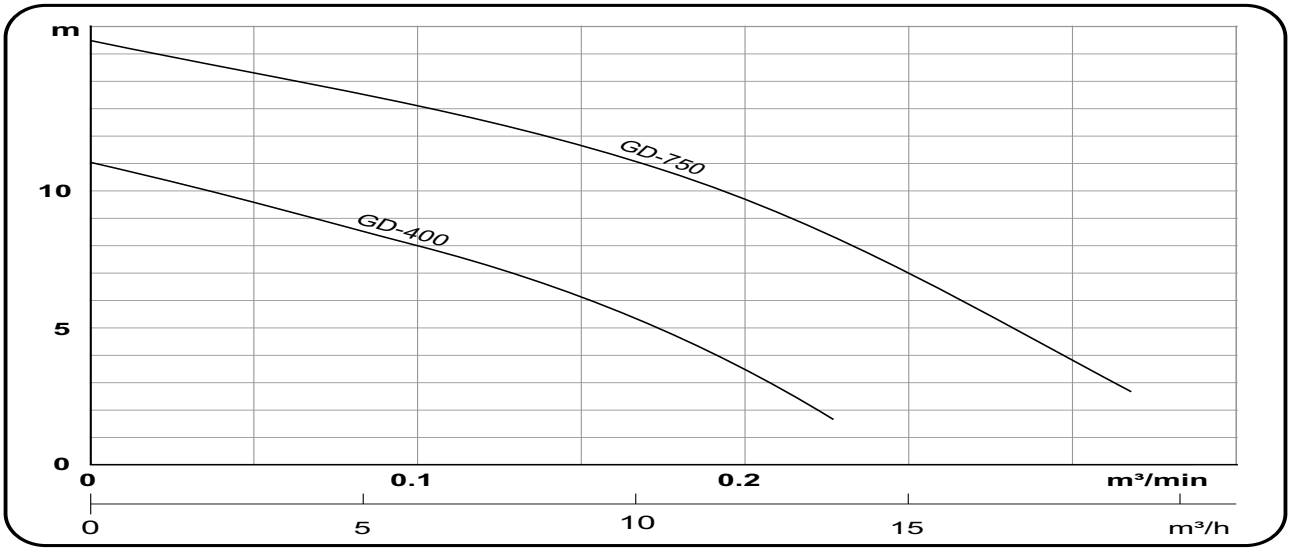

Model	Power HP(KW)	Discharge (mm)	Start method	Head (m)	Solid passage mm	Standard		Weight(kg)
						m^3/min	m^3/h	1ø
GD-400	0.5(0.4)	2"(50)	Capacitor	8	7.0	0.1	6.0	10.5
GD-750	1(0.75)	2"(50)	Capacitor	11	7.0	0.16	9.60	12.6

Dimensions

Application model	Discharge Inch(mm)	Dimensions [mm]		
		A	B	C
GD-400	2"(50)	230	185	305
GD-750	2"(50)	230	185	327

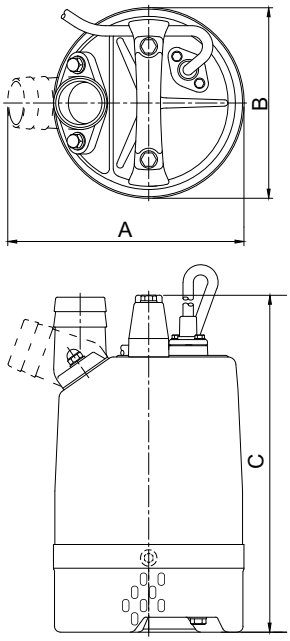

Product features

• The model is equipped with a 50mm (2 inch) discharge that is available in vertical and horizontal.

• The exchangeable discharge prevents the layflat hose from folding because of the uneven ground.

• Two types of discharge connections are available: LOT threaded and LOH hose coupling. Thread type can be

chosen between PF, PT, and NPT threads.

• The models are available in the automatic version, that has a floating switch (F) or a vertical type floating switch(FV), to automatically switch the pump on and off.

LOH 2" hose coupling discharge

LOT 2" threaded discharge

GDR400

Feature

• A water cooling motor with rubber suction pads for residual removal as low as 1 mm (0.39”). Start up at water level of 5 mm.

• The best pump for removing water from flat surfaces because of its portability and light weight.

• Equipped with double seals (silicon carbide), epoxy resin cable, IP68, an auto-cut motor protector and rubberized hydraulic components that can withstand any tough applications.

• Standard discharge: Outlet Discharge 1” LOT 1-74 (Optional 2” LOT 2-74)

Applications

• Basement / Pool / Pond water removal.

• Residential, Commercial residue dewatering.

Definition of model

GDR	-	400
Type		watt

Product Features

• Epoxy Cable Base

An epoxy resin seal cable base prevents moisture from entering the motor through the core wires.

• Auto-cut Protector

Automatic On/Off motor protector to prevent motor burn out due to high temperature and excess amperage draw.

• Mechanical Seals

Superior abrasion resistant mechanical seal manufactured with silicon carbide to ensure the best seal effect.

•High Efficiency Dry Motors

All stator coils need to be treated with insulating varnish procedure to achieve the best insulation, efficiency and durability.

Specifications

Item		Description
Limits of use	Liquid Temp	0 ~ 40 °C
	Applications	Construction sites/Basins dewatering
Type	Frequency	50Hz
	Motor	2P • Dry motor
	Insulation	Class B
	Protection	IP68
	Protector	Auto cut
	Bearing	Ball type
	M.seal	Double M.seal
	Impeller	Semi-open
Material	Upper cover	ADC 12
	Motor Frame	ADC 12
	Main Shaft	SUS410
	M.seal	Lower: Silicon/Silicon Upper: Carbon/Ceramic
	Casing	Synthetic Rubber
	Impeller	Urethane Rubber + SPCC
	Cable	VCT or H07RN-F or SJOW/SOW
Optional		Pumps can be customized to fit specifications

Performance Curves

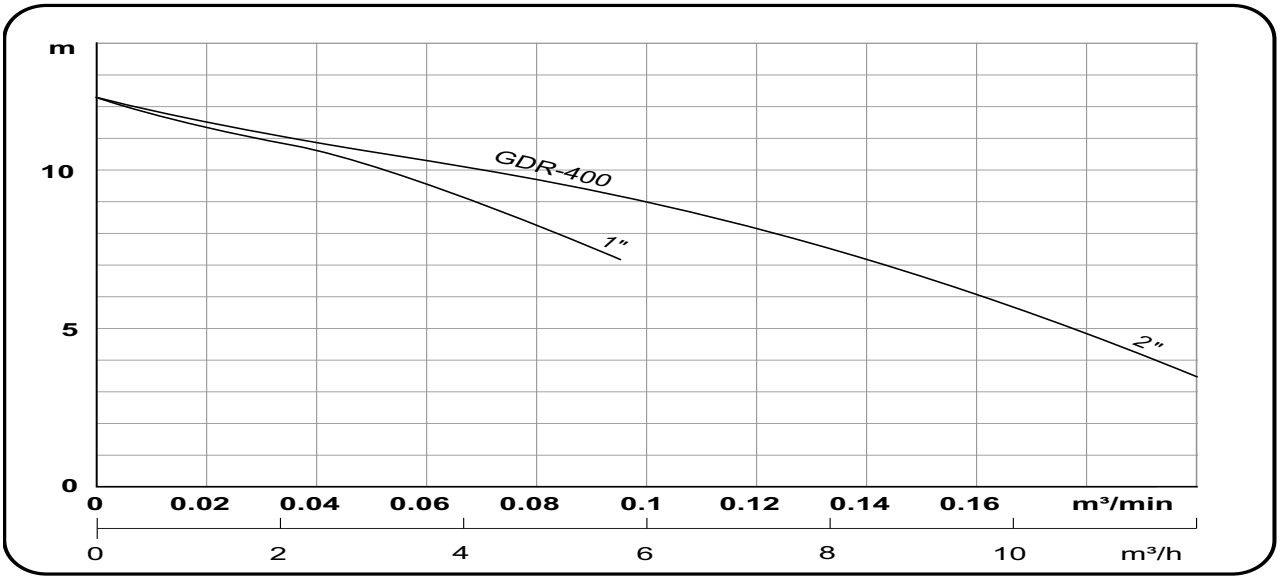

Model	Power HP(KW)	Discharge (mm)	Start method	Head (m)	Standard		Weight(kg)
					m^3/min	m^3/h	1ø
GDR-400	0.5(0.4)	1"(25)	Capacitor	9.5	0.06	3.60	11.8
		2"(50)	Capacitor	8	0.12	7.20	11.8

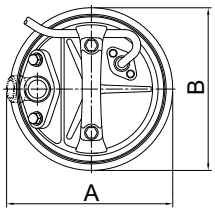

Dimensions

Application model	Discharge Inch(mm)	Dimensions [mm]		
		A	B	C
GDR-400	1"(25)	209	205	304
	2"(50)	240	205	304

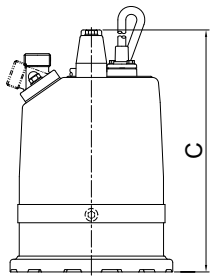

N Series • Waste Water Pumps

Power: 0.4 ~2.2 kW
Max. Head: 29 m
Max. Capacity: 66 m^3/h

Feature

- A precision manufactured motor is achieved utilizing the highest standard of quality control.
  To ensure a 100 % quality manufactured motor with stable characteristics and a highest efficiency.
  All rotor adopted heat treatment method for drive shaft assembling and stator winding impregnated with varnish and heat dried in industrial oven.
- SPCO's professional assembly line, complimented with a synthesized production test ensures the highest level of final pump quality.
- Standard accessories include: cable with an epoxy resin sealed water resistant cable base, Auto-cut thermal motor protector, dual mechanical seal and lip seal desion.
- N-05A is an extreme practical and low temperature oil filled motor and single seal design pump.
- N-05L ½HP Maximum capacity 0.3m^3/min (15-25% flow increase compare to N-05A/B).

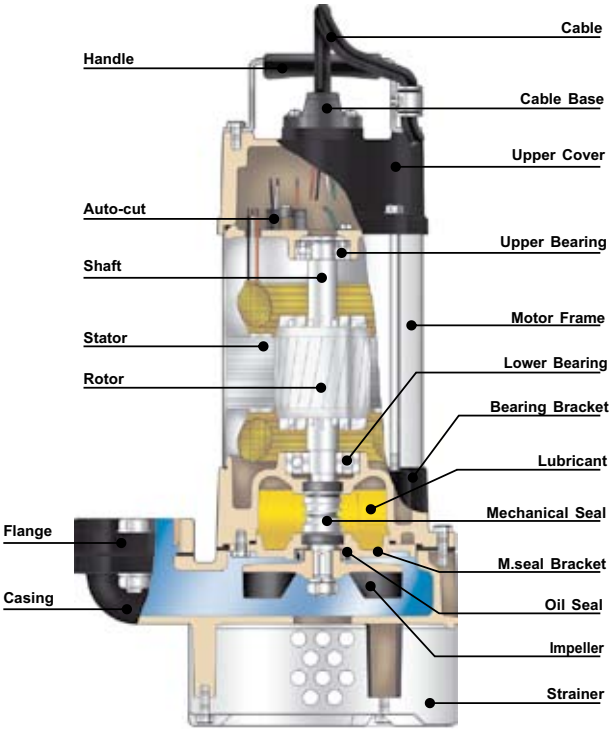

Applications

- Waste water. sump drainage. flood control.
- De-watering for fish pond or basement and cellars.

Definition of model

N	-	05	A
Type		½HP	Version

N	-	2	1	F
Type		Discharge Inch	HP	Float

N-05A • N-05B • N-05L • N-31

Specifications

Item		Description
Limits of use	Liquid Temp	0 ~ 40 °C
	Applications	Clean / Dirty water from Sumps Basins and tanks
	Submersion Depth	100feet (30m)
Type	Frequency	50Hz
	Motor	2P • Dry motor (N-05A : Oil Motor)
	Insulation	Class B
	Protection	IP68
	Protector	Auto cut (N-05A 3Ø : none) (N-05A & N-05B 1Ø : Overheat)
	Bearing	Ball type
	M.seal	Double M.seal (N-05A : Single M.seal)
	Impeller	Semi-open
Material	Outer Cover	Cast Iron
	Motor Frame	SS304
	Main Shaft	SS410
	M.seal	Lower: Silicon/Silicon Upper: Carbon/Ceramic (N-05A : Carbon/Ceramic)
	Casing	Cast Iron
	Impeller	Cast Iron (N-05A & N-05B : PA)
	Cable	VCT or H07RN-F or SJOW/SOW
Optional		Float switch (N-05A 3Ø : none)

N-05A

N-05LF

AAS Type
Semi open Impeller

PA Type
Semi open Impeller

Performance Curves

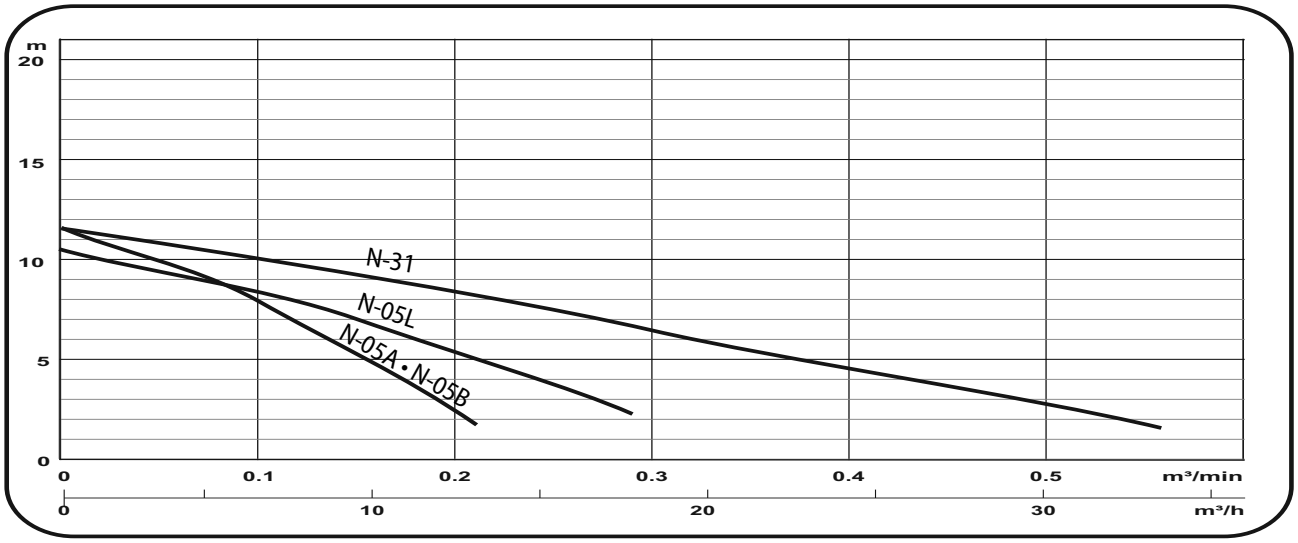

Model	Power HP (kw)	Discharge inch (mm)	Q:m³/min	0.05	0.1	0.15	0.2	0.25	0.3	0.4	0.5
			Q:m³/h	3	6	9	12	15	18	24	30
N-05A	½ (0.4)	2" (50)	H (m)	10.0	8.0	5.6	2.8	--	--	--	--
N-05B	½ (0.4)	2" (50)		10.0	8.0	5.6	2.8	--	--	--	--
N-05L	½ (0.4)	2" (50)		9.8	8.6	7.0	5.1	2.8	--	--	--
N-31	1 (0.75)	3" (80)		11.2	10.3	9.4	8.4	7.4	6.5	4.5	2.3

Model	Power HP (kw)	Discharge inch (mm)	Standard m - m³/h	Max m - m³/h	Solid Passage	Weight (W/O Cable) 1ø - kg	3ø - kg	Phase Voltage	1 ø 220V	1 ø 230V	1 ø 240V	3 ø 230V	3 ø 380V	3 ø 400V	3 ø 415V
N-05A	½ (0.4)	2" (50)	8 - 6	11.5 - 14.4	7.5	12	12	Full Load Ampere	3.1	3	2.9	2.2	1.3	1.3	1.2
N-05B	½ (0.4)	2" (50)	8 - 6	11.5 - 14.4	7.5	13	12		2.9	2.8	2.7	2	1.2	1.2	1.1
N-05L	½ (0.4)	2" (50)	7 - 9	10.5 - 18	8	16	14		3.4	3.3	3.2	2.3	1.4	1.3	1.3
N-31	1 (0.75)	3" (80)	6.5 - 18	12 - 36	10	18	17		5.4	5.2	5	3.3	2	1.9	1.8

Dimensions

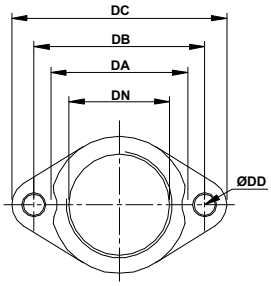

Thread Available	
PF	NPT

EF2-84 • EF2-96 • EF3-130

Nomenclature : EF 2 - 84
Flange Set / Discharge (inch-DN) / Pitch Circle Diameter (mm-DB)

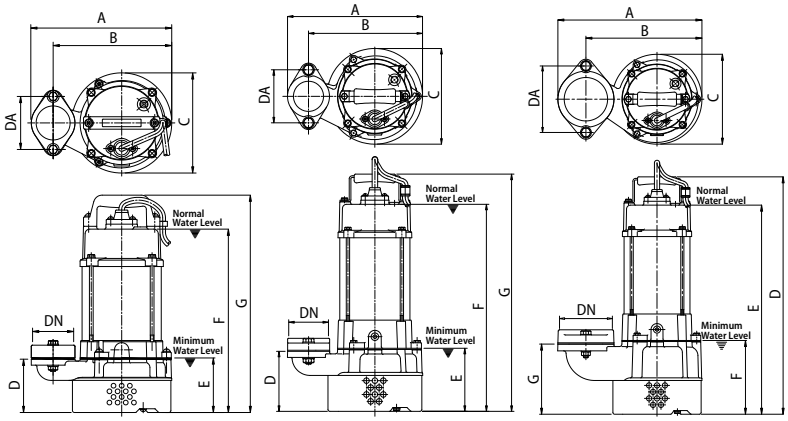

N-05A • N-05B N-05L N-31

Elbow (flange) set	Application Model	Dimensions [mm]				
		DN	DA	DB	DC	DD
EF2-84	N-05A	50	72	84	105	9.5
EF2-84	N-05B	50	72	84	105	9.5
EF2-96	N-05L	50	77	96	121	12
EF3-130	N-31	80	109	130	155	12

Model	Dimensions [mm]								
	DN	DA	A	B	C	D	E	F	G
N-05A	50	84	226	191	161	86	88	294	349
N-05B	50	191	227	191	161	86	88	318	349
N-05L	50	96	245	207	173	109	100	375	430
N-31	80	130	278	224	173	457	403	142	135

GRS (Guide Rail System) Dimensions

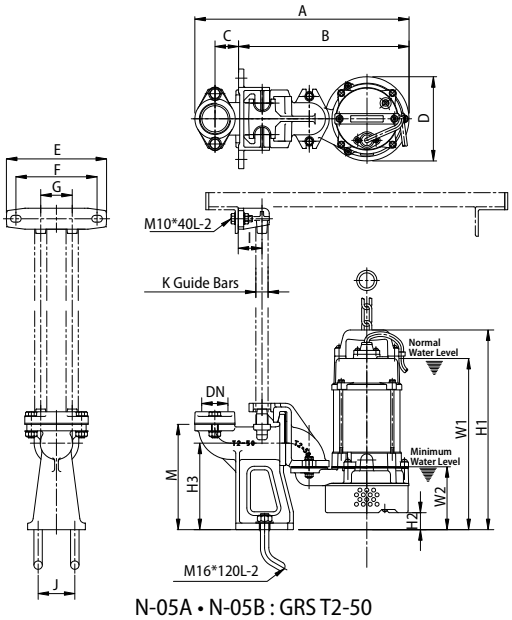

N-05A • N-05B : GRS T2-50

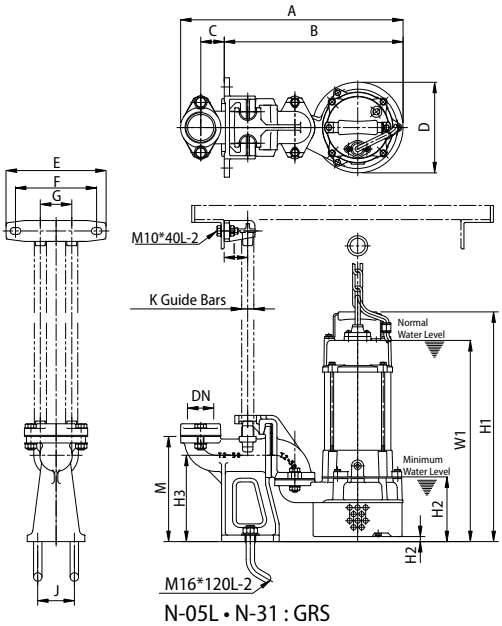

N-05L • N-31 : GRS

Model	Dimensions [mm]																
	DN	A	B	C	D	E	F	G	I	J	K	M	W1	W2	H1	H2	H3
N-05A	50	409	325	45	161	190	155	60	50	70	19	201	327	121	382	33	165
N-05B	50	409	325	45	161	190	155	60	50	70	19	201	327	121	382	33	165
N-05L	50	425	342	45	173	190	155	60	50	70	19	201	385	110	439	9.5	165

N-21 • NN-21 • NN-21.5

Specifications

Item		Description
Limits of use	Liquid Temp	0 ~ 40 °C
	Applications	Clean / Dirty water from Sumps Basins and tanks
	Submersion Depth	100feet (30m)
Type	Frequency	50Hz
	Motor	2P • Dry motor
	Insulation	Class B
	Protection	IP68
	Protector	Auto cut
	Bearing	Ball type
	M.seal	Double M.seal
	Impeller	Semi-open
Material	Outer Cover	Cast Iron
	Motor Frame	SS304
	Main Shaft	SS403
	M.seal	Lower: Silicon/Silicon Upper: Carbon/Ceramic
	Casing	Cast Iron
	Impeller	Cast Iron
	Cable	VCT or H07RN-F or SJOW/SOW
Optional		Float switch

N-21F

NN-21.5

AAS Type
Semi open Impeller

PA Type
Semi open Impeller

Performance Curves

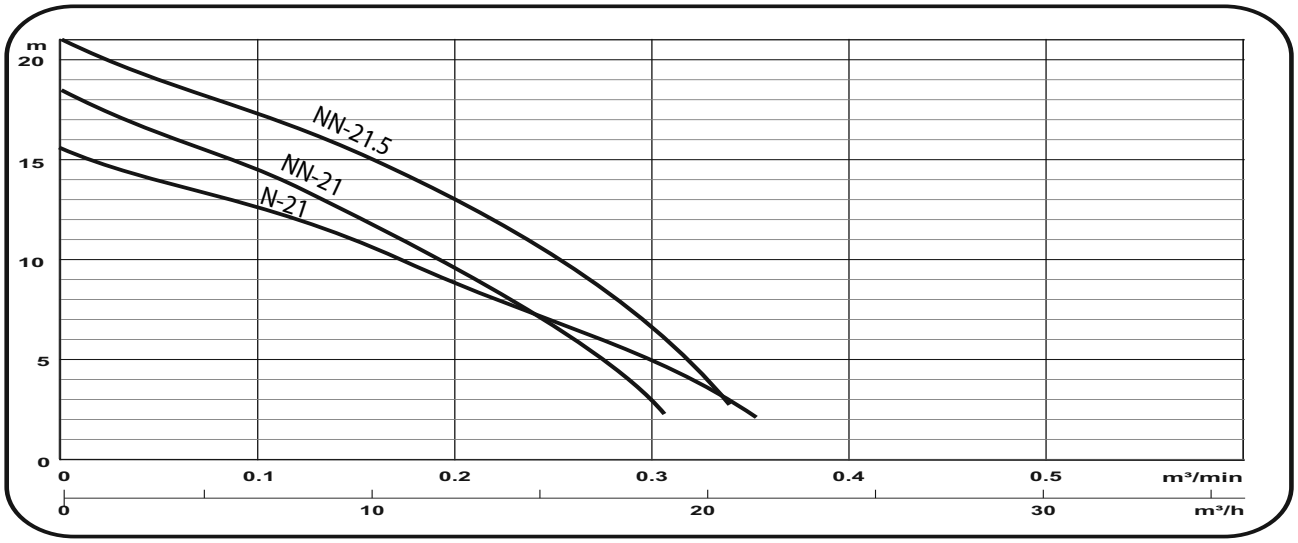

Model	Power HP (kw)	Discharge inch (mm)	Q:m³/min	0.05	0.1	0.15	0.2	0.25	0.3	0.4	0.5
			Q:m³/h	3	6	9	12	15	18	24	30
N-21	1 (0.75)	2" (50)	H (m)	14.0	12.6	11.0	9.2	7.1	4.6	--	--
NN-21	1 (0.75)	2" (50)		--	14.5	12.7	10	6.5	3.1	--	--
NN-21.5	1.5 (1.1)	2" (50)		--	17	15.2	12.7	11.7	5.5	--	--

Model	Power HP (kw)	Discharge inch (mm)	Standard	Max	Solid Passage	Weight (W/O Cable)		Phase	1 ø	1 ø	1 ø	3 ø	3 ø	3 ø	3 ø
			m - m³/h	m - m³/h		1ø - kg	3ø - kg	Voltage	220V	230V	240V	230V	380V	400V	415V
N-21	1 (0.75)	2" (50)	10 - 10.8	15 - 22.8	10	17	15	Full Load Ampere	5.4	5.2	5	3.3	2	1.9	1.8
NN-21	1 (0.75)	2" (50)	13.5 - 7.2	18.5 - 19.2	7	18	17		5.2	5		3.5	2	2	1.9
NN-21.5	1½ (1.1)	2" (50)	15 - 9.6	21 - 21	7	20	18		6.6	6.4		4.2	2.4	2.4	2.3

Dimensions

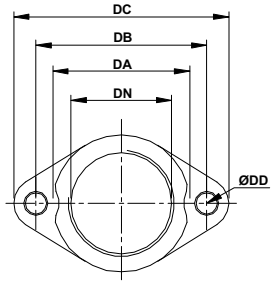

Female Thread	
PT	NPT

EF2-96

Nomenclature : EF 2 - 96
Flange Set / Discharge (inch-DN) / Pitch Circle Diameter (mm-DB)

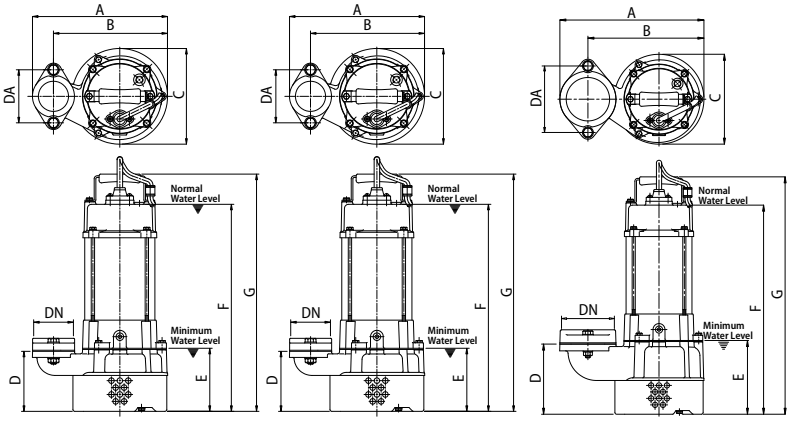

N-21 NN-21 NN-21.5

Elbow (flange) set	Application Model	Dimensions [mm]				
		DN	DA	DB	DC	DD
EF2-96	N-21	50	77	96	121	12
EF2-96	NN-21	50	77	96	121	12
EF2-96	NN-21.5	50	77	96	121	12

Model	Dimensions [mm]								
	DN	DA	A	B	C	D	E	F	G
N-21	50	96	245	207	173	109	100	375	430
NN-21	50	96	262	224	187	91	90	353	408
NN-21.5	50	96	262	224	187	91	90	373	428

GRS (Guide Rail System) Dimensions

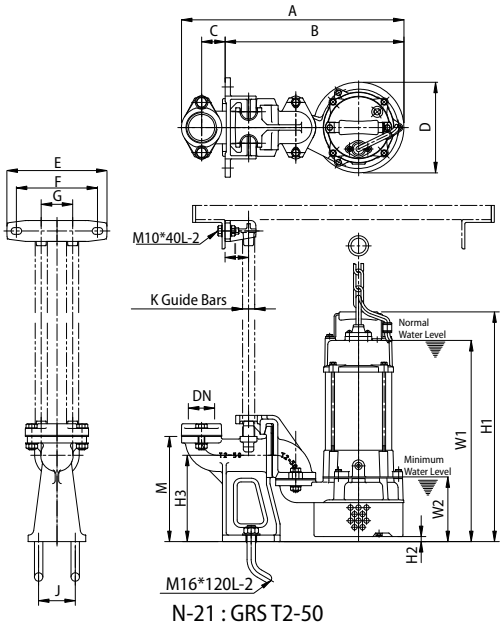

N-21 : GRS T2-50

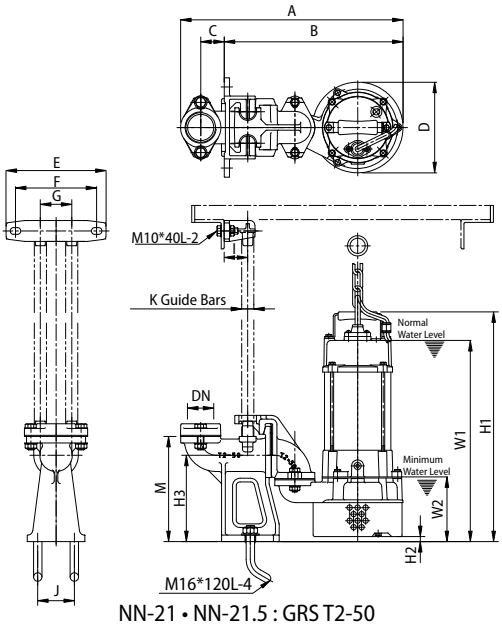

NN-21 • NN-21.5 : GRS T2-50

Model	Dimensions [mm]																
	DN	A	B	C	D	E	F	G	I	J	K	M	W1	W2	H1	H2	H3
N-21	50	425	342	45	173	190	155	60	50	70	19	201	385	110	439	9.5	165
NN-21	50	443	359	45	345	190	155	60	45	70	19	201	380	123	435	27	165
NN-21.5	50	443	359	45	345	190	155	60	45	70	19	201	400	123	455	27	165

NN-22 • NN-23 • NN-32

Specifications

Item		Description
Limits of use	Liquid Temp	0 ~ 40 °C
	Applications	Clean / Dirty water from Sumps Basins and tanks
	Submersion Depth	100feet (30m)
Type	Frequency	50Hz
	Motor	2P • Dry motor
	Insulation	Class F
	Protection	IP68
	Protector	Auto cut
	Bearing	Ball type
	M.seal	Double M.seal
	Impeller	Semi-open
Material	Outer Cover	Cast Iron
	Motor Frame	SS304
	Main Shaft	SS403
	M.seal	Lower: Silicon/Silicon Upper: Carbon/Ceramic
	Casing	Cast Iron
	Impeller	Cast Iron
	Cable	VCT or H07RN-F or SJOW/SOW
Optional		Float switch · 5HP: None

NN-22

NN-32

Semi open Impeller

Enclosed-chanel Impeller

Performance Curves

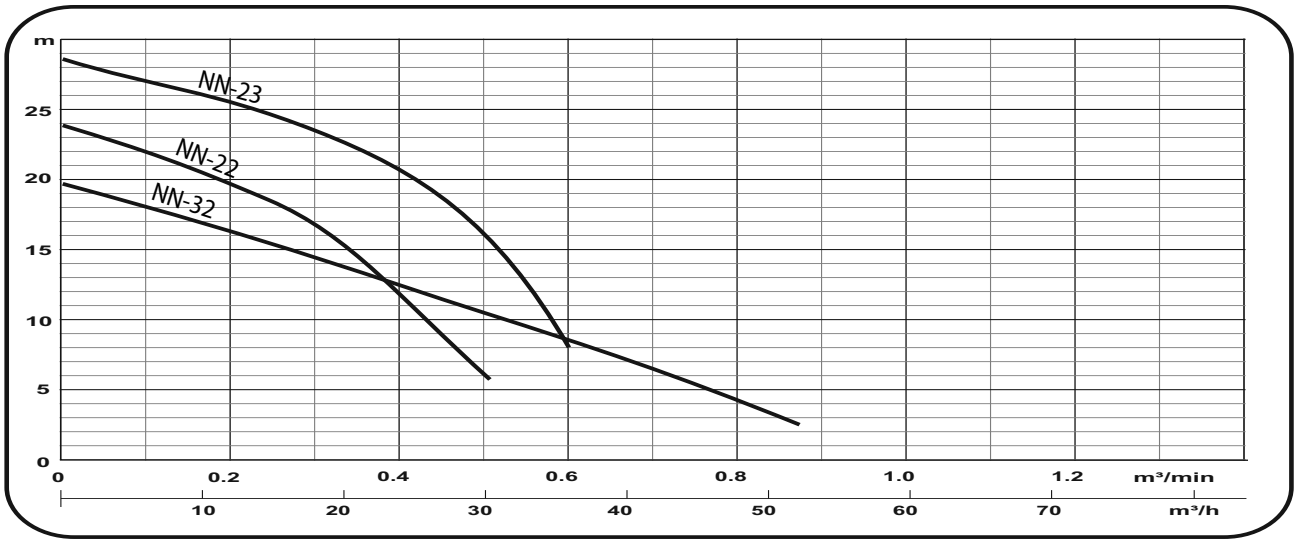

Model	Power HP (kw)	Discharge inch (mm)	Q:m³/min	0.1	0.2	0.3	0.4	0.5	0.7	0.8	0.9
			Q:m³/h	6	12	18	24	30	42	48	54
NN-22	2 (1.5)	2" (50)	H (m)	22	20	16.6	11.5	6.1	--	--	--
NN-32	2 (1.5)	3" (80)		16.8	15	13.4	11.6	10	6.2	--	--
NN-23	3 (2.2)	2" (50)		27	25.5	23	19	13.6	9	--	--

Model	Power HP (kw)	Discharge inch (mm)	Standard	Max	Solid Passage	Weight (W/O Cable)		Phase	1 ø	1 ø	3 ø	3 ø	3 ø	3 ø	3 ø
			m - m³/h	m - m³/h		1ø - kg	3ø - kg	Voltage	220V	230V	230V	380V	400V	415V	525V
NN-22	2 (1.5)	2" (50)	18.5 - 15	24 - 33	10.5	31	27	Full Load Ampere	10.2	10	6.1	3.6	3.5	3.4	2.7
NN-32	2 (1.5)	3" (80)	10.5 - 30	20 - 54	10.5	33	29		10.2	10	6.1	3.6	3.5	3.4	2.7
NN-23	3 (2.2)	2" (50)	23.5 - 18	29.5 - 39	10.5	35	30		15	14.6	8.6	5.1	5	4.8	3.8

Dimensions

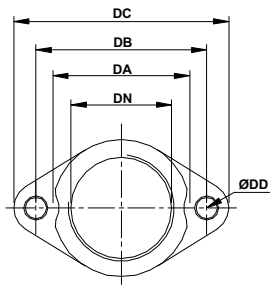

Female Thread	
PT	NPT

EF2-96

Nomenclature : EF 2 - 96

Flange Set — Discharge (inch-DN) — Pitch Circle Diameter (mm-DB)

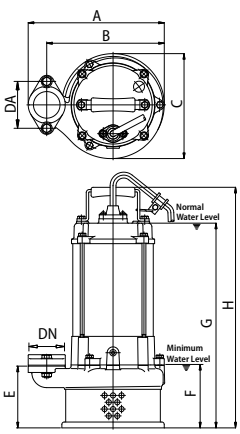

NN-22

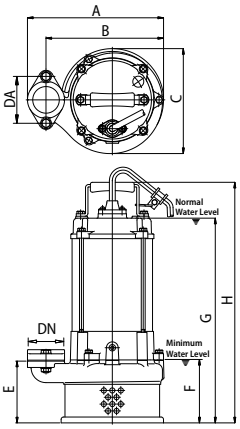

NN-23

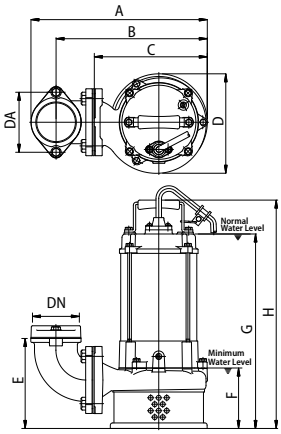

NN-32

Elbow (flange) set	Application Model	Dimensions [mm]					Holes
		DN	DA	DB	DC	DD	
EF2-120	NN-22	50	77	96	121	12	2
EF3-130	NN-32	80	109	130	155	12	4
EF2-120	NN-23	50	77	96	121	12	2

Model			Dimensions [mm]									
	DN	DA	A	B	C	D	E	F	G		H	
									1ø	3ø	1ø	3ø
NN-22	50	120	282	244	207	-	138	141	517	436	280	499
NN-32	80	130	391	337	249	208	214	152	528	447	591	510
NN-23	50	120	282	244	207	-	138	141	517	436	280	499

GRS (Guide Rail System) Dimensions

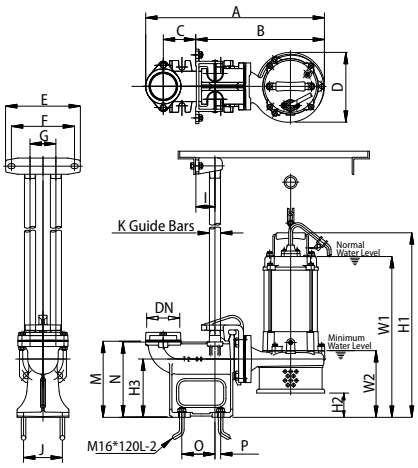

NN-22 • NN-23: GRS T50E-E5

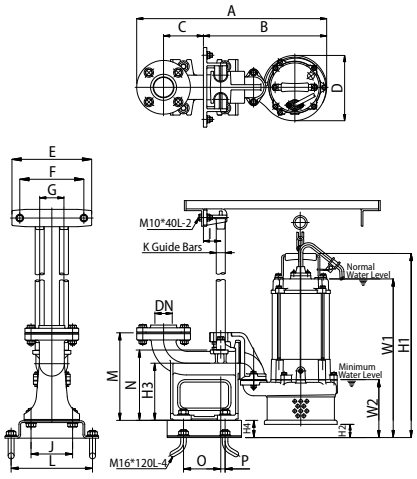

NN-32 : GRS T2-80

Model	Dimension[mm]																						
	DN	A	B	C	D	E	F	G	I	J	K	L	M	N	O	P	W1		W2	H1		H2	H3	H4
																	1ø	3ø		1ø	3ø			
NN-22	50	557	394	105	207	215	180	70	50	235	1"	--	240	202	108	13	544	463	168	607	526	27	165	--
NN-32	80	557	402	100	208	230	195	80	60	120	1.25"	160	235	233	103	18	589	508	213	652	571	61	180	15
NN-23	50	557	394	105	207	215	180	70	50	235	1"	--	240	202	108	13	556	463	168	619	526	27	165	--

NN-33 • NN-43 • NN-35

Specifications

Item		Description
Limits of use	Liquid Temp	0 ~ 40 °C
	Applications	Clean / Dirty water from Sumps Basins and tanks
	Submersion Depth	100feet (30m)
Type	Frequency	50Hz
	Motor	2P • Dry motor
	Insulation	Class F
	Protection	IP68
	Protector	Auto cut
	Bearing	Ball type
	M.seal	Double M.seal
	Impeller	Semi-open
Material	Outer Cover	Cast Iron
	Motor Frame	SS304
	Main Shaft	SS403
	M.seal	Lower: Silicon/Silicon Upper: Carbon/Ceramic
	Casing	Cast Iron
	Impeller	Cast Iron
	Cable	VCT or H07RN-F or SJOW/SOW
Optional		Float switch · 5HP: None

NN-33

NN-43

Semi open Impeller

Enclosed-chanel Impeller

Performance Curves

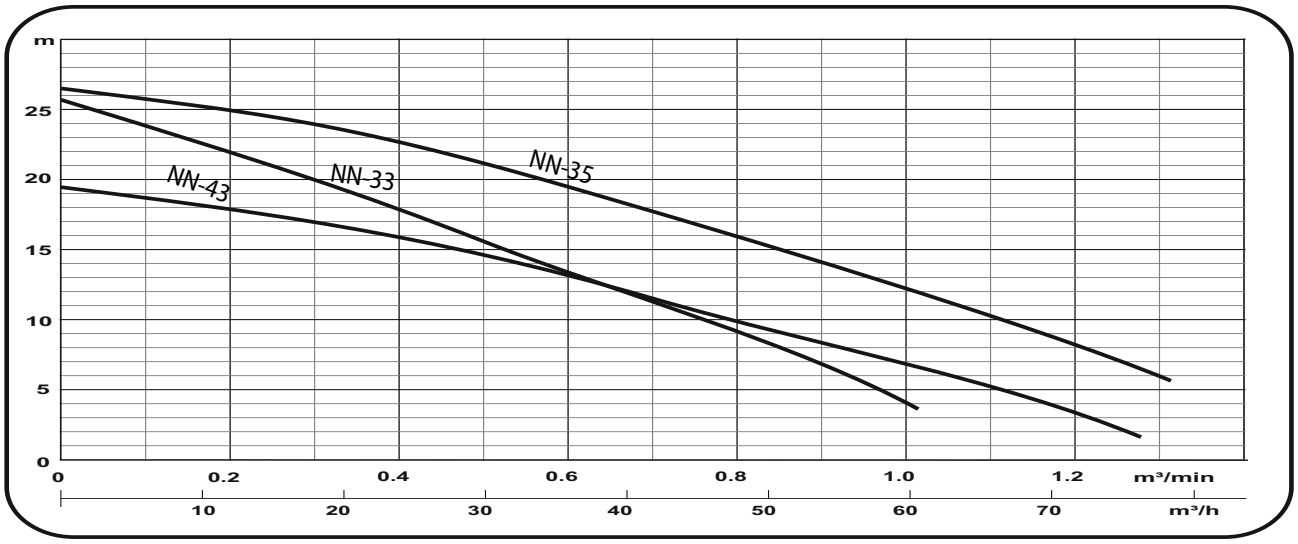

Model	Power HP (kw)	Discharge inch (mm)	Q:m³/min	0.3	0.4	0.5	0.6	0.7	0.8	0.9	1.0
			Q:m³/h	18	24	30	36	42	48	54	60
NN-33	3 (2.2)	3" (80)	H (m)	20	18	15.5	13	10.5	8	4.5	--
NN-43	3 (2.2)	4" (100)		16	15	13.5	12	11	9.5	8	6.5
NN-35	5 (3.7)	3" (80)		23.1	22	21	19.4	18	16.5	14.5	12

Model	Power HP (kw)	Discharge inch (mm)	Standard m - m³/h	Max m - m³/h	Solid Passage	Weight (W/O Cable) 1ø - kg	3ø - kg	Phase Voltage	1 ø 220V	1 ø 230V	3 ø 230V	3 ø 380V	3 ø 400V	3 ø 415V	3 ø 525V
NN-33	3 (2.2)	3" (80)	15.5 - 30	25.5 - 63	10.5	37	32	Full Load Ampere	15	14.6	8.6	5.1	5	4.8	3.8
NN-43	3 (2.2)	4" (100)	11.5 - 42	19.5 - 78	20	37	32		15	14.6	8.6	5.1	5	4.8	3.8
NN-35	5 (3.7)	3" (80)	19 - 36	26.5 - 84	20	--	35		--	--	14.3	8.3	7.9	7.9	6.3

Dimensions

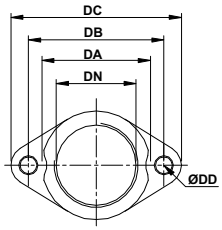

Thread Available	
PF	NPT

EF2-96 • EB3-130

Nomenclature :

EF 2 - 96

Flange Set / Discharge (inch-DN) / Pitch Circle Diameter (mm-DB)

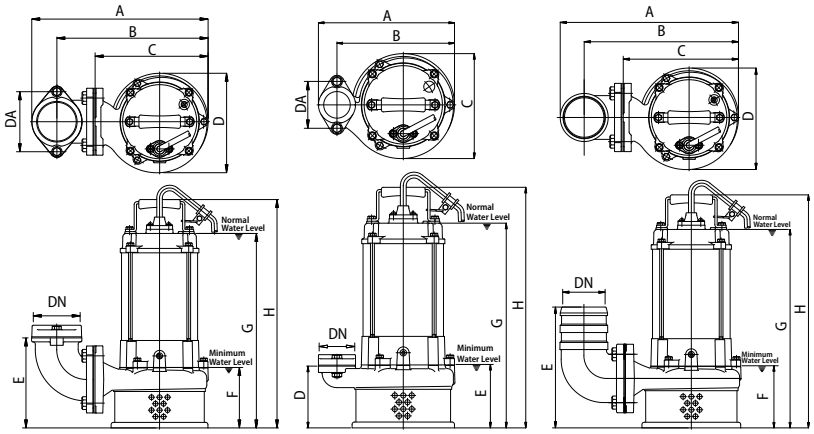

NN-33 NN-35 NN-43

Elbow (flange) set	Application Model	Dimensions [mm]					Holes
		DN	DA	DB	DC	DD	
EF3-130	NN-33	80	109	130	155	12	2
EBH4-(145)	NN-43	100		150	185	15	4
EF3-150	NN-35	80		150	185	15	8

Model			Dimensions [mm]									
	DN	DA	A	B	C	D	E	F	G		H	
									1ø	3ø	1ø	3ø
NN-33	80	130	391	337	249	208	214	152	540	447	603	510
NN-43	80	145	389	338	248	207	275	162	538	457	601	520
NN-35	80	150	443	351	248	207	249	162	--	477	--	540

GRS (Guide Rail System) Dimensions

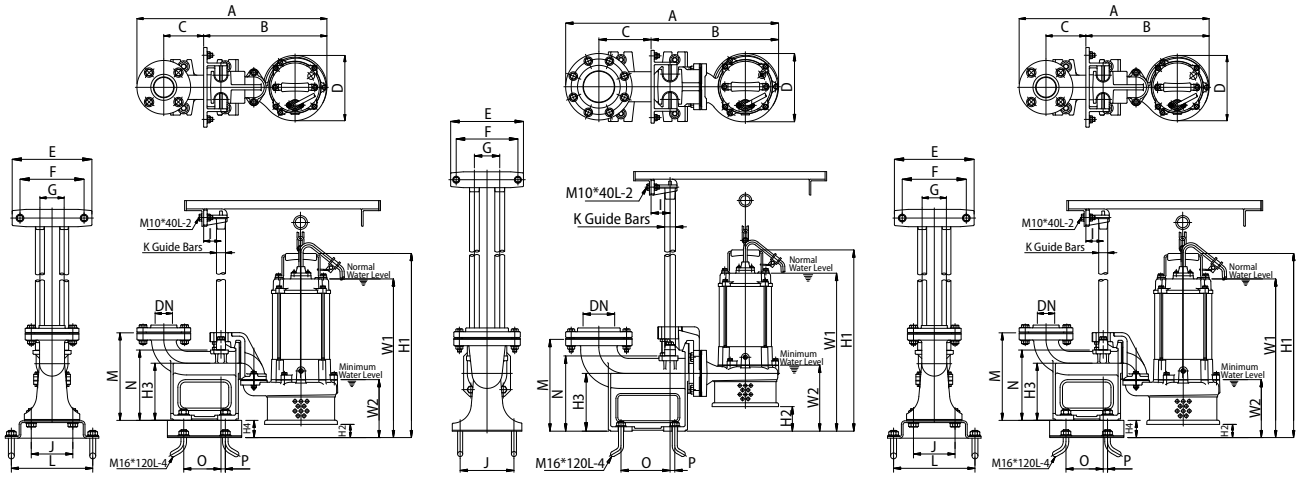

NN-33 : GRS T2-80 NN-43 : GRS T100(80)B NN-35 : GRS T80D

Model	Dimension[mm]																						
	DN	A	B	C	D	E	F	G	I	J	K	L	M	N	O	P	W1		W2	H1		H2	H3	H4
																	1ø	3ø		1ø	3ø			
NN-33	80	557	402	100	208	230	195	80	60	120	1.25"	160	235	233	103	18	601	508	213	664	571	61	180	15
NN-43	80	656	401	150	207	230	195	80	60	170	1.25"	--	285	233	155	15	594	513	217	657	576	27	180	--
NN-35	80	623	400	130	207	230	195	80	60	150	1.25"	190	280	233	135	15	--	535	220	--	598	58	180	15

NA Series • Waste Water Pumps

Power: 1.5 ~7.5 kW
Max. Head: 38 m
Max. Capacity: 126 m^3/h

Feature

- Equipped with Auto-cut, silicon carbide double mechanical seal, epoxy cable base treatment.
- Entire cast iron structure and compact design.
- Available with Guide Rail System.
- High head and efficiency for wide range design.

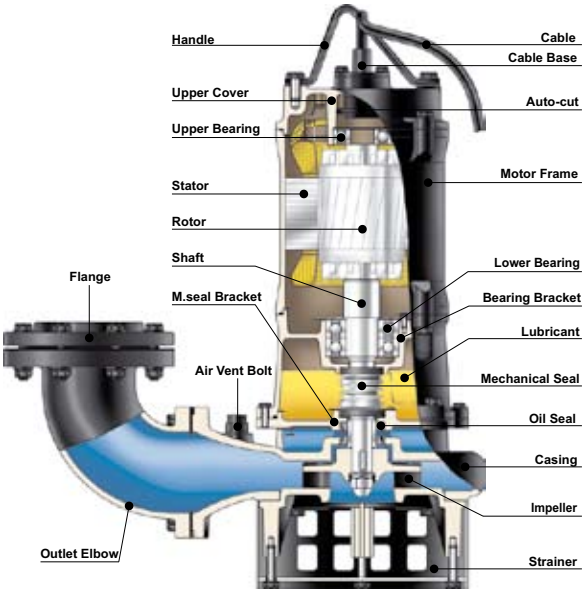

Applications

- Waste Water drainage for all industries.
- Pumping surface water, drainage water and flood water.
- Extraction of water from river and lake.

Pressure-Reducing Design

100NA25.5 & 100NA27.5 pump's impeller were designed in high head pressure reading design will release the high pressure in volute casing when operating.

Definition of model

80	-	NA	2	1.5	F
Discharge mm		Type	Pole	Kw	Float

50NA21.5 • 50NA22.2 • 80NA21.5 • 80NA22.2

Specifications

Item		Description
Limits of use	Liquid Temp	0 - 40 °C
	Applications	Waste water , Sewage and Drainage water
	Submersion Depth	100feet (30m)
Type	Frequency	50Hz
	Motor	2P • Dry motor
	Insulation	Class B (2-5HP : Class F)
	Protection	IP68
	Protector	Auto cut
	Bearing	Ball type
	M.seal	Double M.seal
	Impeller	Semi-open
Material	Outer Cover	Cast Iron
	Motor Frame	Cast Iron
	Main Shaft	SS403
	M.seal	Lower: Silicon/Silicon Upper: Carbon/Ceramic
	Casing	Cast Iron
	Impeller	Cast Iron
	Cable	VCT or H07RN-F or SJOW/SOW
Optional		Float switch (5HP : none)

50NA21.5

80NA22.2

Semi-open Impeller

Semi-open Impeller

Performance Curves

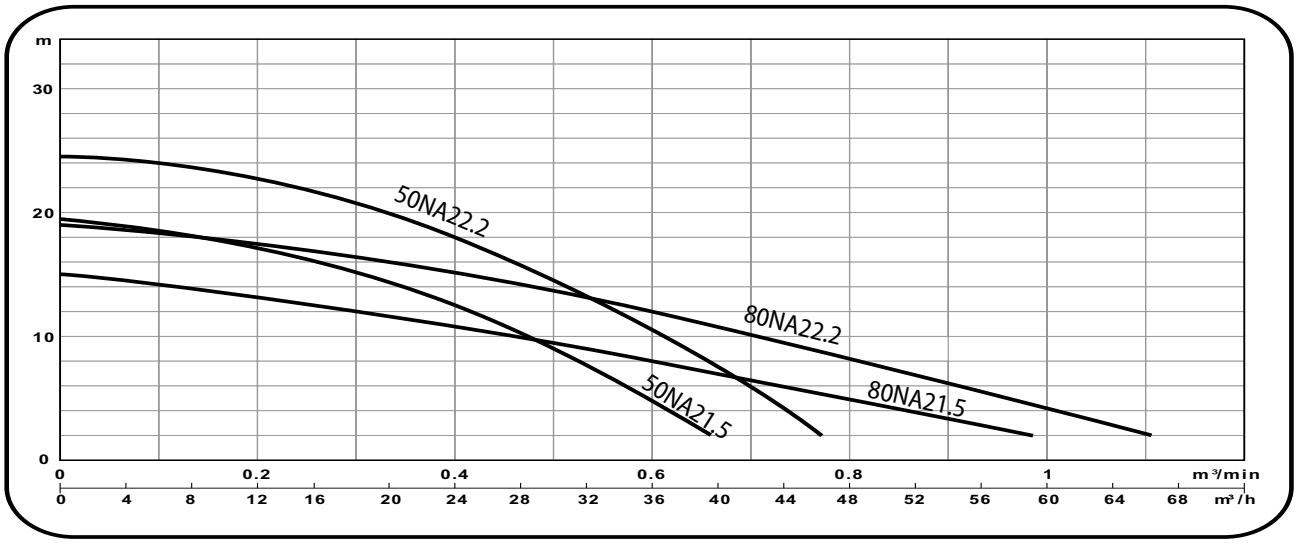

Model	Power HP (kw)	Discharge inch (mm)	Q:m³/min	0.1	0.2	0.3	0.4	0.6	0.8	1.0	1.1
			Q:m³/h	6	12	18	24	36	48	60	66
50NA21.5	2 (1.5)	2" (50)	H (m)	18.5	17.1	15.1	12.5	4.8	--	--	--
50NA22.2	3 (2.2)	2" (50)		24.0	22.7	20.7	18.0	10.5	--	--	--
80NA21.5	2 (1.5)	3" (80)		14.2	13.2	12.0	10.8	8.0	4.9	1.8	--
80NA22.2	3 (2.2)	3" (80)		18.3	17.4	16.4	15.2	12.0	8.2	4.1	2.0

Model	Power HP (kw)	Discharge inch (mm)	Standard	Max	Solid Passage mm	Weight (W/O Cable)		Phase	1ø	1ø	1ø	3ø	3ø	3ø	3ø
			m - m³/h	m - m³/h		1ø - kg	3ø - kg	Voltage	220V	230V	240V	230V	380V	400V	415V
50NA21.5	2 (1.5)	2" (50)	12.5 - 24	19.5 - 42	20	79	32	Full Load Ampere	10.4	10	9.8	6.1	3.6	3.5	3.4
50NA22.2	3 (2.2)	2" (50)	18 - 24	24.5 - 48	20	38	35		15	14.6	14.4	8.6	5.1	5	4.8
80NA21.5	2 (1.5)	3" (80)	8 - 36	15 - 66	20	42	36		10.4	10	9.8	6.1	3.6	3.5	3.4
80NA22.2	3 (2.2)	3" (80)	12 - 36	19 - 72	20	44	40		15	14.6	14.4	8.6	5.1	5	4.8

Dimensions

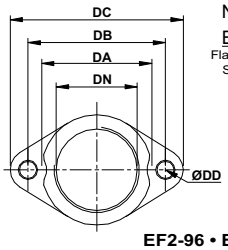

Nomenclature :

EF 2 - 96

Flange Set | Discharge (inch-DN) | Pitch Circle Diameter (mm-DB)

Thread Available	
PF	NPT

EF2-96 • EB3-130

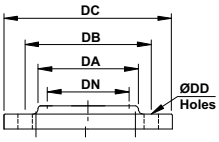

Thread Available	
PF	NPT

EB3-150

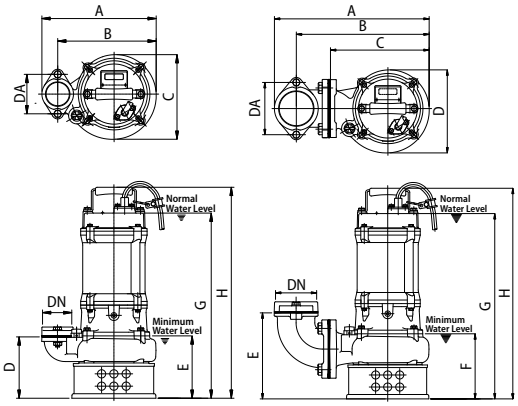

50NA21.5 • 50NA22.2 80NA21.5 • 80NA22.2

Elbow (flange) set	Application Model	Dimensions [mm]					Holes
		DN	DA	DB	DC	DD	
EF2-96	50NA21.5	50	77	96	121	12	2
EF2-96	50NA22.2	50	77	96	121	12	2
EB3-130	80NA21.5	80	109	130	155	12	2
EB3-130	80NA22.2	80	109	130	155	12	2

Model			Dimensions [mm]									
	DN	DA	A	B	C	D	E	F	G		H	
									1ø	3ø	1ø	3ø
50NA21.5	50	96	279	241	206	150	150	--	502	451	565	514
50NA22.2	50	96	279	241	206	150	150	--	535	451	598	514
80NA21.5	80	130	385	333	247	207	214	160	512	461	575	524
80NA22.2	80	130	385	333	247	207	214	160	545	461	608	524

GRS (Guide Rail System) Dimensions

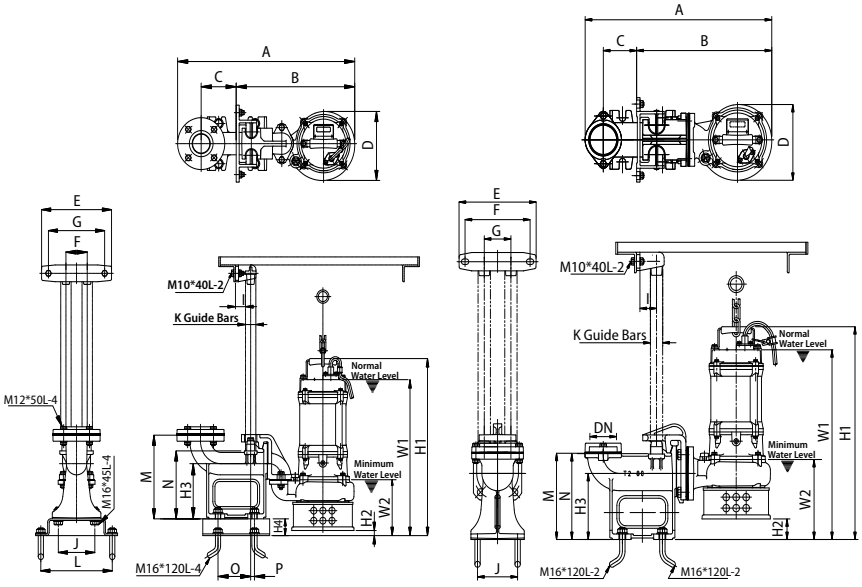

50NA21.5 • 50NA22.2 : GRS T50C+TE5 80NA21.5 • 80NA22.2 : GRS T2-80

Model	Dimension[mm]																						
	DN	A	B	C	D	E	F	G	I	J	K	L	M	N	O	P	W1		W2	H1		H2	H3	H4
																	1ø	3ø		1ø	3ø			
50NA21.5	50	583	115	115	206	230	70	185	50	120	25	235	250	203	108	13	517	466	165	580	529	15	165	50
50NA22.2	50	583	115	115	206	230	70	185	50	120	25	235	250	203	108	13	550	466	165	613	529	15	165	50
80NA21.5	80	560	410	100	210	230	195	80	50	120	32	--	235	233	--	--	572	521	220	635	584	60	180	--
80NA22.2	80	560	410	100	210	230	195	80	50	120	32	--	235	233	--	--	605	521	220	668	584	60	180	--

80NA23.7A

Specifications

Item		Description
Limits of use	Liquid Temp	0~40°C
	Applications	Wastewater and Sewage
	Submersion Depth	100feet (30m)
Type	Frequency	50Hz
	Motor	2P • Dry motor
	Insulation	Class F
	Protection	IP68
	Protector	Auto cut
	Bearing	Ball type
	M.seal	Double M.seal
	Impeller	Semi-open
Material	Upper Cover	Cast Iron
	Motor Frame	Cast Iron
	Main Shaft	SS403
	M.seal	Lower: Silicon/Silicon Upper: Carbon/Ceramic
	Casing	Cast Iron
	Casing Cover	Cast Iron
	Impeller	Cast Iron
	Cable	VCT or H07RN-F or SOW

80NA23.7A

Semi-open Impeller

Performance Curves

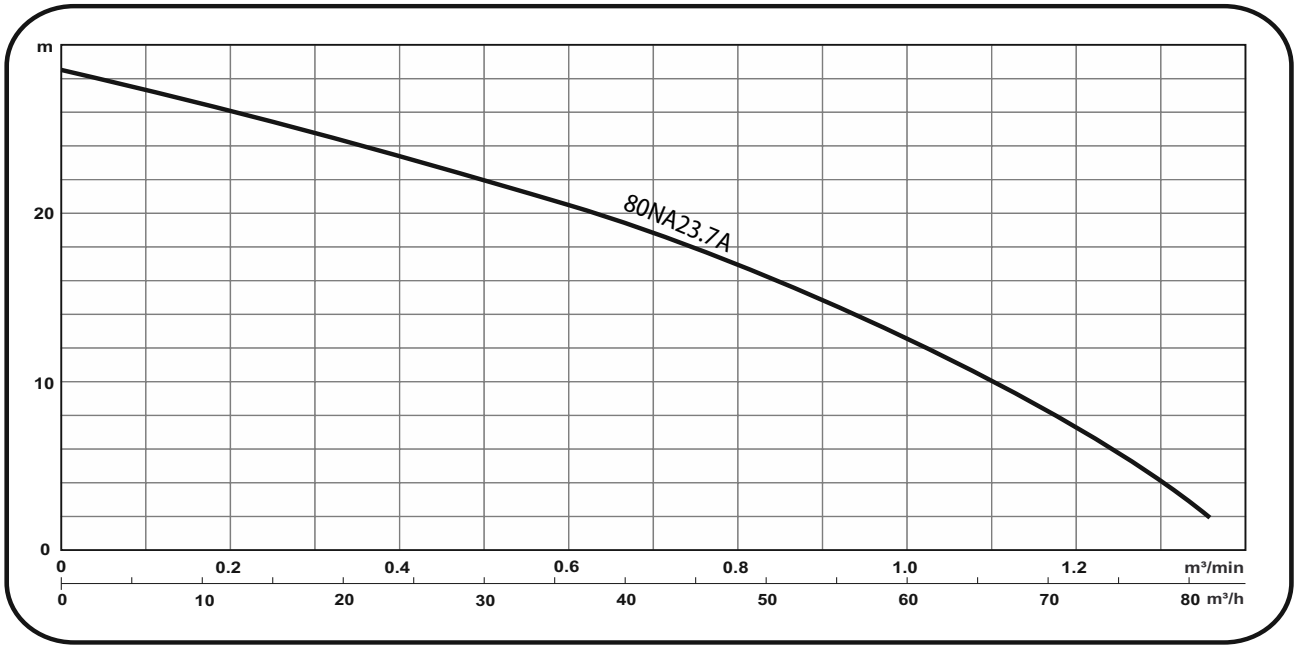

Model	Power HP (kW)	Discharge Inch (mm)	Q:m³/min	0.2	0.4	0.6	0.8	1	1.1	1.2	1.3
			Q:m³/h	12	24	36	48	60	66	72	78
80NA23.7A	5 (3.7)	3" (80)	H (m)	26.0	23.4	20.5	16.9	12.5	10.0	7.3	4.1

Model	Power HP (kW)	Discharge inch (mm)	Standard	Max	Solid Passage mm	Weight (W/O Cable)		Phase	1ø	3ø	3ø	3ø	3ø	3ø	3ø
			m - m³/h	m - m³/h		1ø - kg	3ø - kg	Voltage	220V	220V	230V	380V	440V	460V	525V
80NA23.7A	5 (3.7)	3" (80)	20.5-36	28.5-84	20	--	49	Full Load Ampere	--	14.2	14	8.4	7.1	7	6.2

Dimensions

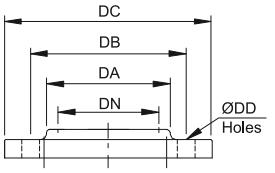

Thread Available	
PT (BSP.Tr.)	NPT

EF3-150

Nomenclature : EF_ 3_ - 150_
Flange Set / Discharge (inch-DN) / Pitch Circle Diameter (mm-DB)

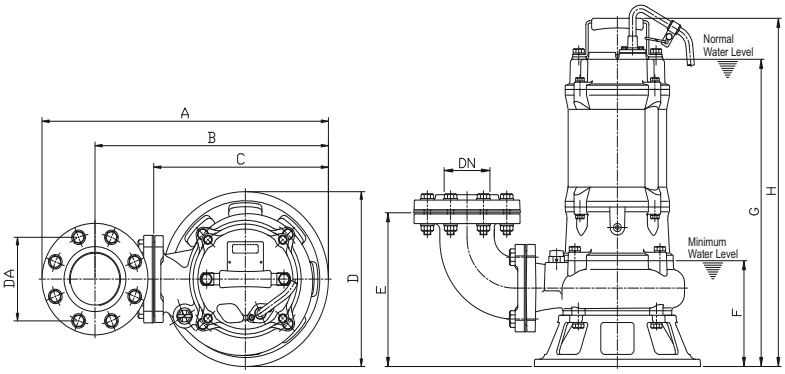

80NA23.7A

Elbow (flange) set	Application Model	Dimensions [mm]					Holes
		DN	DA	DB	DC	DD	
EF3-150	80NA23.7A	80	110	150	185	15	8

Model	Dimensions [mm]									
	DN	DA	A	B	C	D	E	F	G	H
80NA23.7A	80	130	473	381	278	242	255	176	510	578

GRS (Guid Rail System) Dimensions

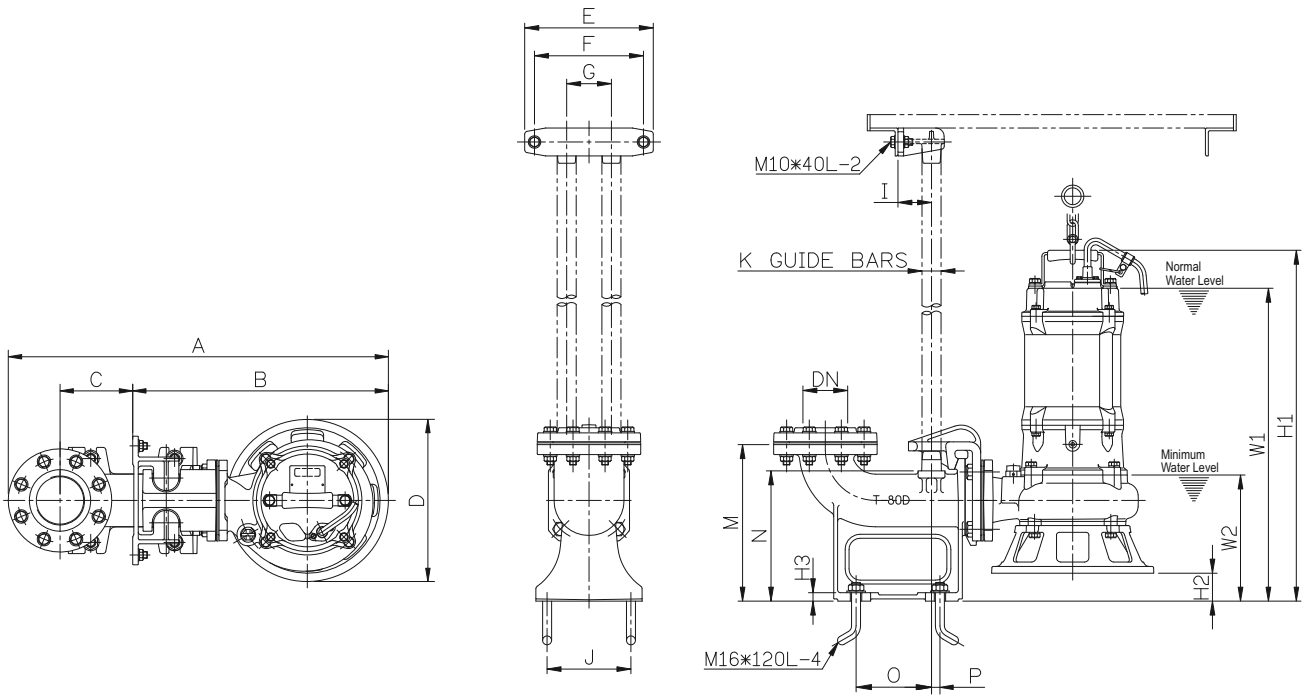

80NA23.7A : GRS T-80D

Model	Dimensions [mm]																			
	DN	A	B	C	D	E	F	G	I	J	K	M	N	O	P	W1	W2	H1	H2	H3
80NA23.7A	80	654	431	130	242	230	195	80	60	150	32	280	233	135	15	628	226	560	50	15

80NA25.5 • 80NA27.5 • 80NA211

Specifications

Item		Description
Limits of use	Liquid Temp	0 - 40 °C
	Applications	Waste water , Sewage and Drainage water
	Submersion Depth	100feet (30m)
Type	Frequency	50Hz
	Motor	2P • Dry motor
	Insulation	Class H
	Protection	IP68
	Protector	Auto cut
	Bearing	Ball type
	M.seal	Double M.seal
	Impeller	Semi-open
Material	Outer Cover	Cast Iron
	Motor Frame	Cast Iron
	Main Shaft	SS403 (7.5-10HP). SS420J2 (15HP)
	M.seal	Lower: Silicon/Silicon Upper: Carbon/Ceramic
	Casing	Cast Iron
	Impeller	Cast Iron
	Cable	VCT or H07RN-F or SOW (10HP/230V : SJOW)
Optional		

Semi-open Impeller

80 NA 25.5 80 NA27.5 80 NA 211

Performance Curves

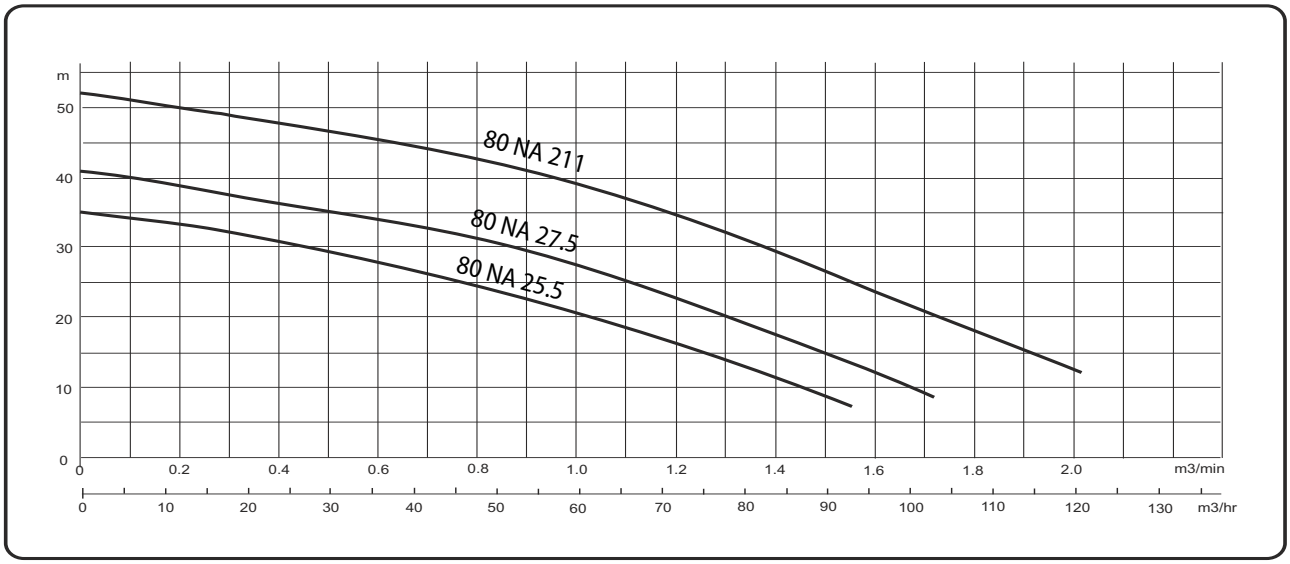

Model	Power HP (kw)	Discharge inch (mm)	Q:m³/min	0.2	0.4	0.6	0.9	1.2	1.5	1.8	2.1
			Q:m³/h	12	24	36	54	72	90	108	126
80 NA 25.5	7.5(5.5)	3" (80)	H (m)	33.0	30.6	27.8	22.8	16.4	9	--	--
80 NA 27.5	10(7.5)	3" (80)	H (m)	39.1	36.8	34.4	29.6	22.8	15.1	--	--
80 NA 211	15(11)	3" (80)	H (m)	50.0	47.8	45.4	40.9	34.6	26.5	18.1	--

Model	Power HP (kw)	Discharge inch (mm)	Standard m - m³/h	Max m - m³/h	Solid Passage	Weight (W/O Cable) 1ø - kg	3ø - kg	Phase Voltage	1 ø 220V	1 ø 230V	3 ø 230V	3 ø 380V	3 ø 400V	3 ø 415V	3 ø 525V
80 NA 25.5	7.5(5.5)	3" (80)	28-36	35-96	20	__	75	Full Load Ampere	__	__	20.2	11.7	11.3	11.2	8.8
80NA27.5	10(7.5)	3" (80)	34.5-36	41.5-105	20	__	81		__	__	26	15.3	14.5	14.4	11.4
80 NA 211	15(11)	3" (80)	45-36	52.5-105	20	__	91		__	__	39	22.2	21.6	21.6	__

Dimensions

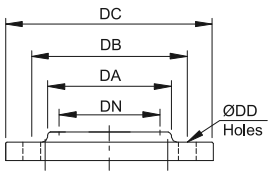

Thread Available	
PT (BSP.Tr.)	NPT

EF3-150

Nomenclature : EF_ 3_ - 150_
Flange Set / Discharge (inch-DN) / Pitch Circle Diameter (mm-DB)

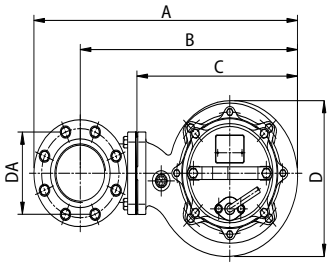

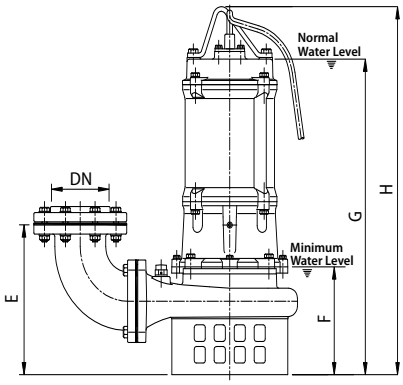

Elbow (flange) set	Application Model	Dimensions [mm]			
		DN	DB	DC	DD
EB3-150	80 NA 25.5	80	185	150	15
EB3-150	80 NA 27.5	80	185	150	15
EB3-150	80 NA 211	80	185	150	15

Model	Dimensions [mm]								
	DN	A	B	C	D	E	F	G	H
80 NA 25.5	80	534	440	342	290	271	198	590	689
80 NA 27.5	80	534	440	342	290	271	198	590	689
80 NA 211	80	534	440	342	290	271	198	630	729

GRS (Guid Rail System) Dimensions

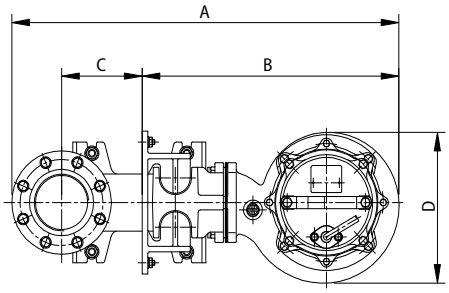

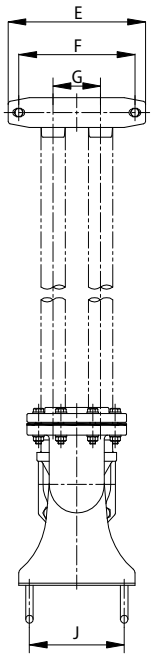

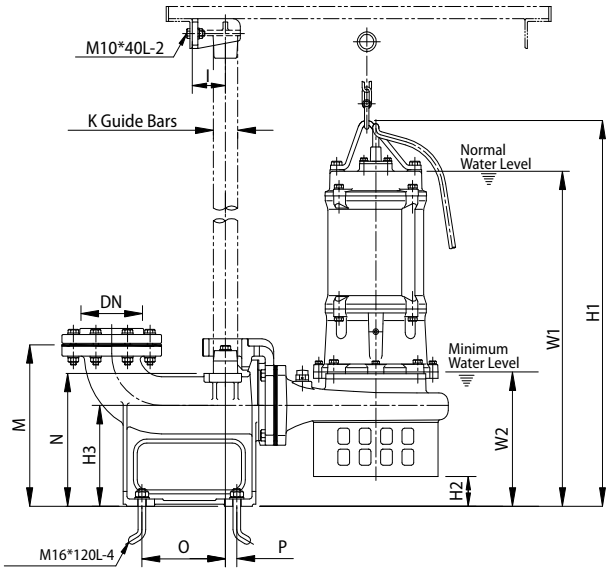

Model	Dimensions [mm]																			
	DN	A	B	C	D	E	F	G	I	J	K	M	N	O	P	W1	W2	H1	H2	H3
80 NA 25.5	80	797	574	130	290	230	195	80	60	150	32	280	233	135	15	620	228	719	30	180
80 NA 27.5	80	797	574	130	290	230	195	80	60	150	32	280	233	135	15	620	228	719	30	180
80 NA 211	80	829	574	150	290	230	195	80	60	170	32	285	233	135	15	660	228	759	30	180

100NA25.5 • 100NA27.5 • 100NA211

Specifications

Item		Description
Limits of use	Liquid Temp	0 - 40 °C
	Applications	Waste water , Sewage and Drainage water
	Submersion Depth	100feet (30m)
Type	Frequency	50Hz
	Motor	2P • Dry motor
	Insulation	Class H
	Protection	IP68
	Protector	Auto cut
	Bearing	Ball type
	M.seal	Double M.seal
	Impeller	Semi-open
Material	Outer Cover	Cast Iron
	Motor Frame	Cast Iron
	Main Shaft	SS403 (7.5-10HP). SS420J2 (15HP)
	M.seal	Lower: Silicon/Silicon Upper: Carbon/Ceramic
	Casing	Cast Iron
	Impeller	Cast Iron
	Cable	VCT or H07RN-F or SOW (10HP/230V : SJOW)
Optional		

Semi-open Impeller

100NA25.5 • 100NA27.5 • 100NA25.5

Performance Curves

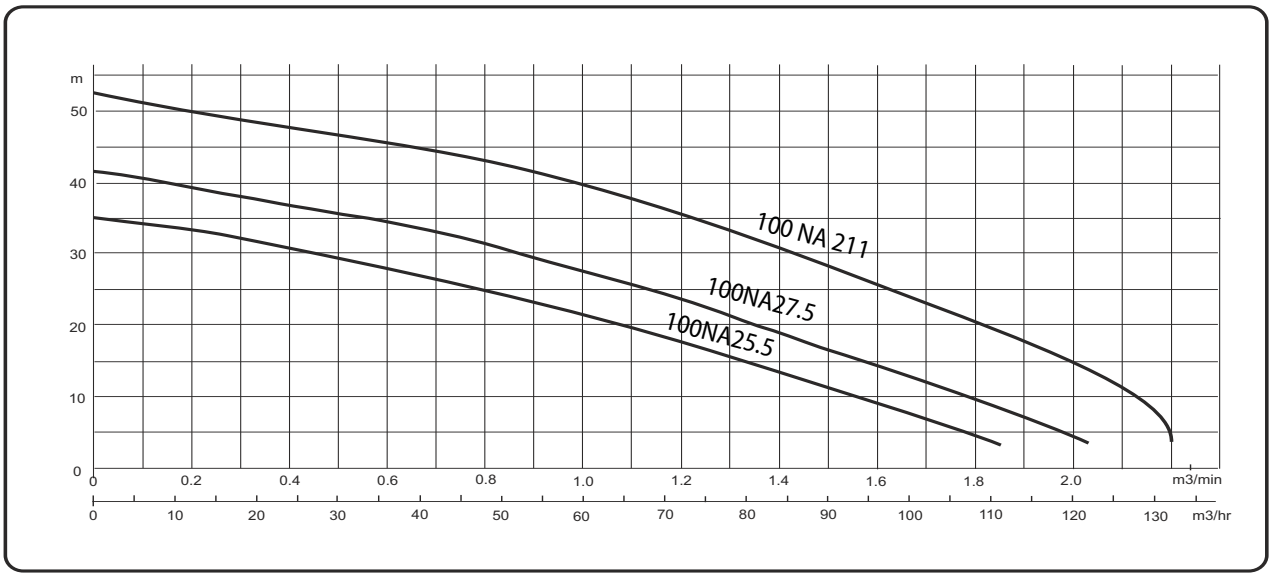

Model	Power HP (kw)	Discharge inch (mm)	Q:m³/min	0.2	0.4	0.6	0.9	1.2	1.5	1.8	2.1
			Q:m³/h	12	24	36	54	72	90	108	126
100 NA 25.5	7.5(5.5)	4" (100)	H (m)	33.0	30.8	28.0	23.3	17.7	11.1	4.5	--
100 NA 27.5	10(7.5)	4" (100)	H (m)	38.6	36.4	34.4	29.8	23.5	16.7	9.6	--
100 NA 211	15(11)	4" (100)	H (m)	50.0	47.8	45.7	41.6	35.6	28.2	20.6	11.5

Model	Power HP (kw)	Discharge inch (mm)	Standard m - m³/h	Max m - m³/h	Solid Passage	Weight (W/O Cable) 1ø - kg	3ø - kg	Phase Voltage	1 ø 220V	1 ø 230V	3 ø 230V	3 ø 380V	3 ø 400V	3 ø 415V	3 ø 525V
100 NA 25.5	7.5(5.5)	4" (100)	21.5-60	35-120	20	__	75	Full Load Ampere	__	__	20.2	11.7	11.3	11.2	8.8
100NA27.5	10(7.5)	4" (100)	28-60	41.5-123	20	__	81		__	__	26	15.3	14.5	14.4	11.4
100 NA 211	15(11)	4" (100)	39.5-60	52.5-123	20	__	91		__	__	39	22.2	21.6	21.6	__

Dimensions

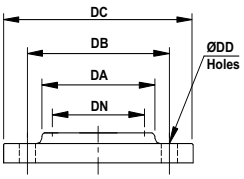

Thread Available	
PT (BSP.Tr.)	NPT

EB4-175

Nomenclature : EB 4 - 175

Elbow Set — Discharge (inch-DN) — Outlet PCD (mm-DB)

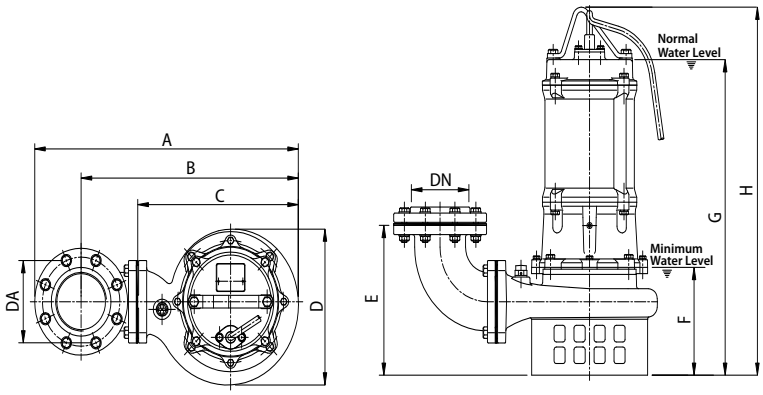

100NA25.5 • 100NA27.5

Elbow (flange) set	Application Model	Dimensions [mm]			
		DN	DB	DC	DD
EB4-175	100NA25.5	100	175	185	15
EB4-175	100NA27.5	100	175	185	15
EB4-175	100 NA 211	100	175	185	15

Model	Dimensions [mm]								
	DN	A	B	C	D	E	F	G	H
100NA25.5	100	565	455	342	290	282	198	590	689
100NA27.5	100	565	455	342	290	282	198	590	689
100 NA 211	80	565	455	342	290	282	198	630	729

GRS (Guide Rail System) Dimensions

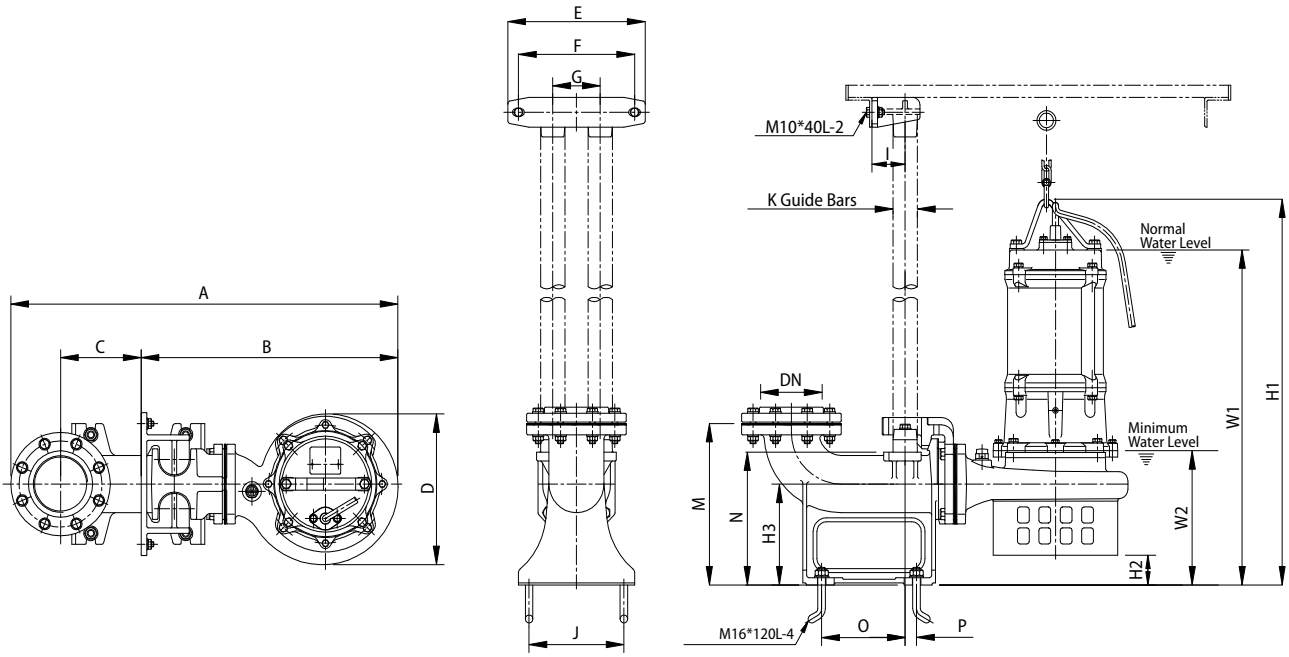

100NA25.5 • 100NA27.5 : GRS T100A

Model	Dimensions [mm]																			
	DN	A	B	C	D	E	F	G	I	J	K	M	N	O	P	W1	W2	H1	H2	H3
100NA25.5	100	829	574	150	290	230	195	80	60	170	32	285	233	155	15	620	228	719	30	180
100NA27.5	100	829	574	150	290	230	195	80	60	170	32	285	233	155	15	620	228	719	30	180
100 NA 211	100	829	574	150	290	230	195	80	60	170	32	285	233	155	15	660	228	759	30	180

MA Series • Waster Water Submersible Pumps

Power: 0.4 ~45 kW
Max. Head: 47m
Max. Capacity: 1560 m^3/h

Feature

- International standard design: cable, auto-cut, dry-motor, silicon carbide mechanical seal, high grade cast iron offering highest quality and performance
- P/U/E multiple impeller designs to handle sewage solids and/or fibrous substances .
- Superior abrasion resistant mechanical seal manufactured with silicon carbide to ensure the best seal effect.
- Oil lip seal mounted out side of seal chamber stops solids gathering around seal faces.
- full range offering low to high head and flow capabilities, with compact and easy installation. Also available with guide rail system, which allows automatic remote connection and disconnection without entering the pit.
- impeller non clogging design.
- MA sewage pumps can be installed as a dry installation. The pump can be operated appr. 10 min when dry installed.

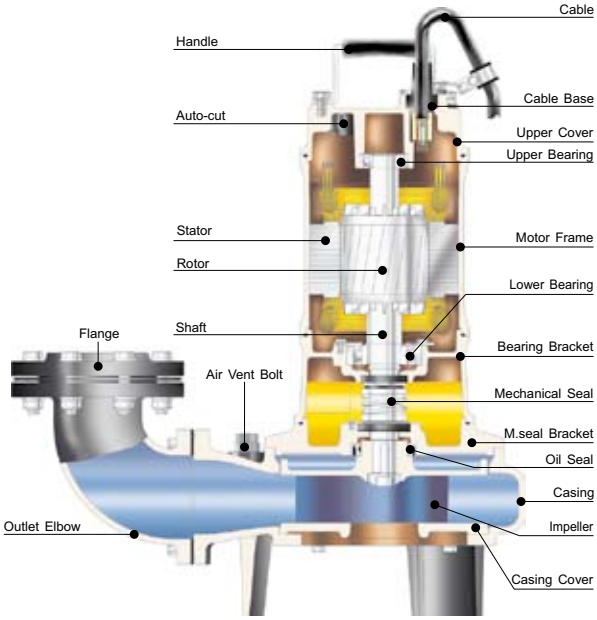

Applications

- Drainage of waste water from the attenuation tank, purifying tank and sewage tank in water treatment plant.
- Drainage of waste water containing fibrous additives from leather factory, dyeing factory and food processing factory.
- sewage management, accumulated water, septic tank, stock farm.
- pumping sewage from single and multifamily dwellings.
- pumping sewage from hotels, restaurants, schools and public buildings.

Definition of model

80	MA	U	2	1.5	F
Discharge mm	Type	Impeller P/U type	Pole	kW	Float

MA	-	55	A	U
Type		5.5kW	Style	Impeller E/U type

MA	-	6	10
Type		Discharge inch	HP

MA	-	10	30	S
Type		Discharge inch	HP	Version

50MAU2.4L • 50MAU2.4 • 50MAU21.5
50MAU2.8L • 50MAU2.8
Specifications

Item		Description
Limits of use	Liquid Temp	0~40°C
	Applications	Wastewater and Sewage
	Submersion Depth	100feet (30m)
Type	Frequency	50Hz
	Motor	2P • Dry motor
	Insulation	Class B
	Protection	IP68
	Protector	Auto cut
	Bearing	Ball type
	M.seal	Double M.seal
	Impeller	Vortex
Material	Upper Cover	Cast Iron
	Motor Frame	Cast Iron
	Main Shaft	SS410
	M.seal	Lower: Silicon/Silicon Upper: Carbon/Ceramic
	Casing	Cast Iron
	Impeller	Cast Iron
	Cable	VCT or H07RN-F or SJOW/SOW
Optional		Float switch

50MAU2.4F
50MAU2.8F

50MAU2.4L
50MAU2.8L

U Type
Vortex Impeller

Performance Curves

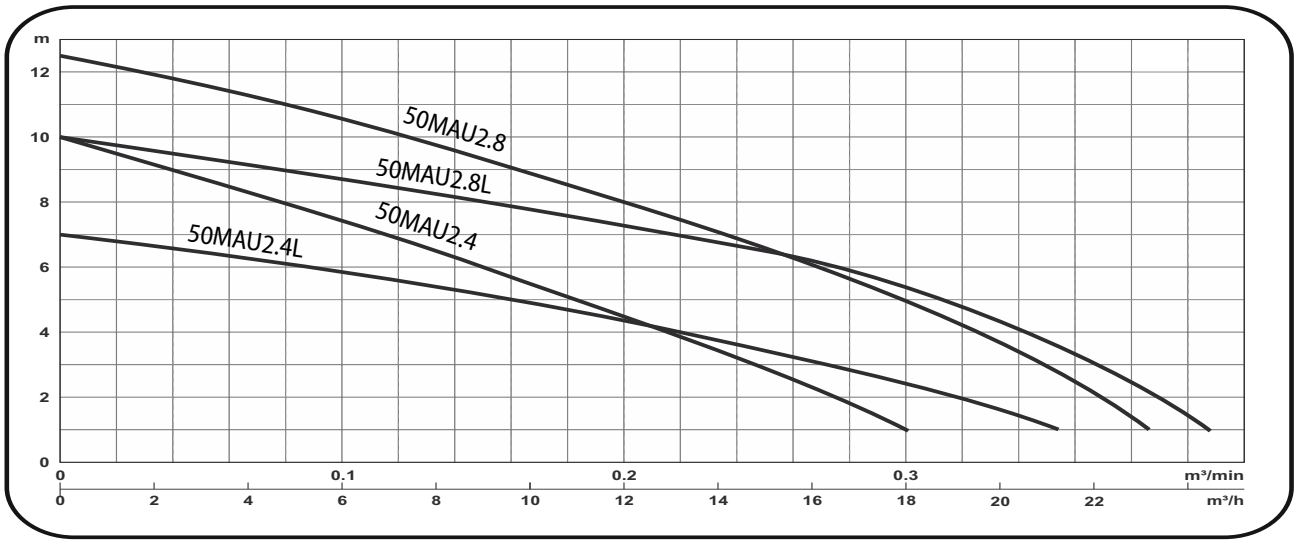

Model	Power HP (kW)	Discharge inch (mm)	Q:m³/min	0.1	0.15	0.2	0.25	0.3	0.35	0.4	0.5
			Q:m³/h	6	9	12	15	18	21	24	30
50MAU2.4L	½ (0.4)	2" (50)	H (m)	5.9	5.1	4.4	3.3	2.2	1	--	--
50MAU2.4	½ (0.4)	2" (50)		7.5	6	4.4	2.9	1	--	--	--
50MAU2.8L	1 (0.75)	2" (50)		8.9	8	7.4	6.5	5	3.8	1.5	--
50MAU2.8	2 (0.75)	2" (50)		10.7	9.5	8	6.5	5.3	2.8	--	--

Model	Power HP (kW)	Discharge inch (mm)	Standard m - m³/h	Max m - m³/h	Solid Passage mm	Weight (W/O Cable) 1ø - kg	3ø - kg	Phase Voltage	1ø 220V	1ø 230V	1ø 240V	3ø 230V	3ø 380V	3ø 400V	3ø 415V
50MAU2.4L	½ (0.4)	2" (50)	4-13.2	7-22.8	50	20	19	Full Load Ampere	3.4	3.3	3.2	2.3	1.4	1.3	1.3
50MAU2.4	½ (0.4)	2" (50)	6-9	10-19.2	35	19	18		3.4	3.3	3.2	2.3	1.4	1.3	1.3
50MAU2.8L	1 (0.75)	2" (50)	6.5-15	10-25.2	50	22	21		5.4	5.2	5.0	3.3	2.0	1.9	1.8
50MAU2.8	1 (0.75)	2" (50)	8-12	12.5-24	35	20	19		5.4	5.2	5.0	3.3	2.0	1.9	1.8

Dimensions

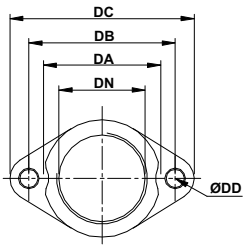

EB2-96

Thread Available	
PF	NPT

Nomenclature : EB 2 - 96
Flange Set / Discharge (inch-DN) / Pitch Circle Diameter (mm-DB)

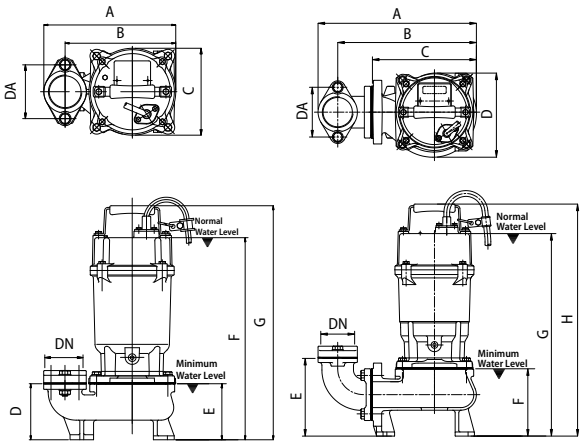

50MAU2.4 • 50MAU2.8 50MAU2.4L • 50MAU2.8L

Elbow (flange) set	Application Model	Dimensions [mm]					Holes
		DN	DA	DB	DC	DD	
EF2-96	50MAU2.4L	50	77	96	121	12	2
EF2-96	50MAU2.4	50	77	96	121	12	2
EF2-96	50MAU2.8L	80	77	96	121	12	2
EF2-96	50MAU2.8	50	77	96	121	12	2

Model	Dimensions [mm]									
	DN	DA	A	B	C	D	E	F	G	H
50MAU2.4L	50	96	306	268	201	163	150	130	391	448
50MAU2.4	50	96	236	198	155	100	100	361	418	--
50MAU2.8L	50	96	306	268	201	163	150	130	391	448
50MAU2.8	50	96	236	198	155	100	100	361	418	--

GRS (Guid Rail System) Dimensions

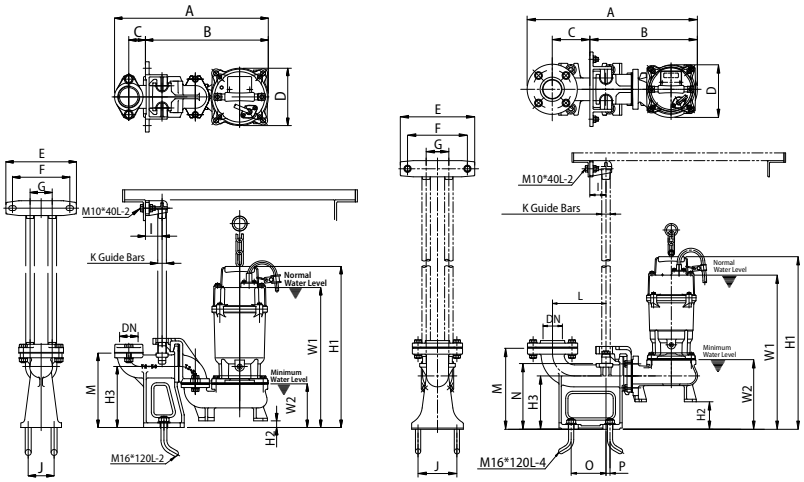

50MAU2.4 • 50MAU2.8 : GRS T2-50 50MAU2.4L • 50MAU2.8L : GRS T50F

Model	Dimensions [mm]																			
	DN	A	B	C	D	E	F	G	I	J	K	M	N	O	P	W1	W2	H1	H2	H3
50MAU2.4L	50	527	333	116	163	230	185	70	50	120	25	250	203	108	13	476	215	533	85	165
50MAU2.4	50	416	343	45	155	190	155	60	50	70	19	--	--	--	--	379	118	436	18	165
50MAU2.8L	50	527	333	116	163	230	185	70	50	120	25	250	203	108	13	476	215	533	85	165
50MAU2.8	50	96	343	45	155	190	60	70	50	70	19	--	--	--	--	379	118	436	18	165

50MAU21.5

Specifications

Item		Description
Limits of use	Liquid Temp	0~40℃
	Applications	Wastewater and Sewage
	Submersion Depth	100feet (30m)
Type	Frequency	50Hz
	Motor	2P • Dry motor
	Insulation	Class F
	Protection	IP68
	Protector	Auto cut
	Bearing	Ball type
	M.seal	Double M.seal
	Impeller	Vortex
Material	Upper Cover	Cast Iron
	Motor Frame	Cast Iron
	Main Shaft	SUS403
	M.seal	Lower: Silicon/Silicon Upper: Carbon/Ceramic
	Casing	Cast Iron
	Impeller	Cast Iron
	Cable	VCT or H07RN-F or SJOW/SOW
Optional		Float switch

50MAU21.5

U Type
Vortex Impeller

Performance Curves

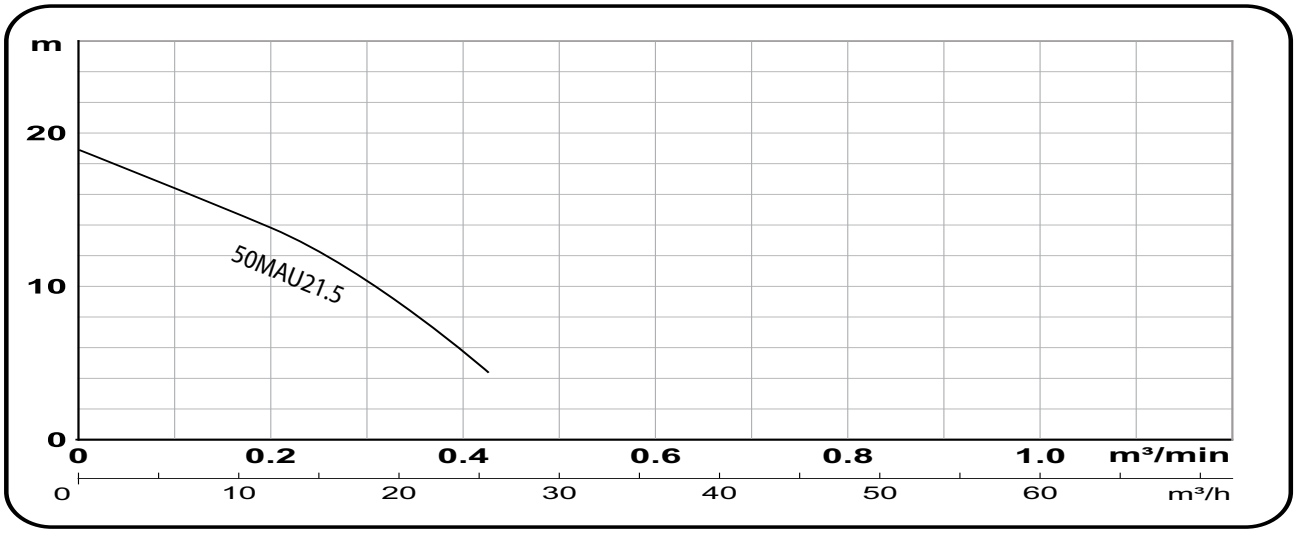

Model	Power HP (kW)	Discharge inch (mm)	Q:m³/min	0.1	0.2	0.3	0.4	0.5	0.6	0.8	1
			Q:m³/h	6	12	18	24	30	36	48	60
50MAU21.5	2(1.5)	2" (50)	H (m)	16.4	13.8	10.3	5.7	--	--	--	--

Model	Power HP (kW)	Discharge inch (mm)	Standard	Max	Solid Passage mm	Weight (W/O Cable)		Phase	1ø	1ø	3ø	3ø	3ø	3ø	3ø
			m - m³/h	m - m³/h		1ø - kg	3ø - kg	Voltage	220V	230V	230V	380V	400V	415V	525V
50 MAU 21.5	2(1.5)	2" (50)	14-12	19-27	35.0	33	29	Full Load Ampere	10.2	10.0	6.1	3.6	3.5	3.4	2.7

Dimensions

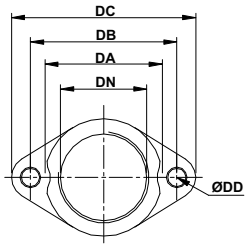

EB2-96

Thread Available	
PF	NPT

Nomenclature : EB 2 - 96
Flange Set / Discharge (inch-DN) / Pitch Circle Diameter (mm-DB)

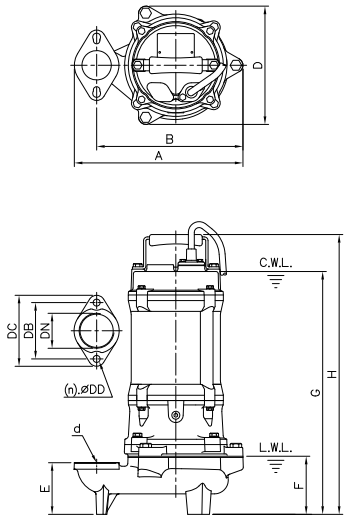

50MAU21.5

Elbow (flange) set	Application Model	Dimensions [mm]				Holes
		DN	DB	DC	DD	
EF2-96	50MAU21.5	50	96	121	12	2

Model	Dimensions [mm]							
	DN	A	B	D	E	F	G	H
50MAU21.5	50	288	250	202	88	100	469	532

GRS (Guid Rail System) Dimensions

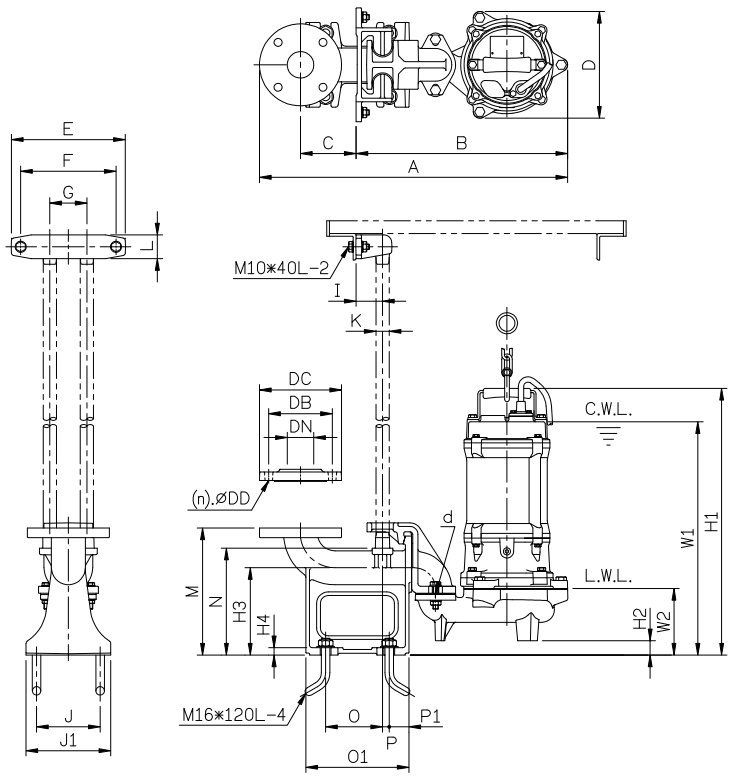

50MAU21.5 GRS: T50E

Model	Dimensions [mm]																							
	DN	A	B	C	D	E	F	G	I	J	J1	K	L	M	N	O	O1	P	P1	W1	W2	H1	H2	H3	H4
50MAU21.5	50	582	400	105	202	215	180	70	50	120	160	25	45	240	202	108	195	13	38	496	127	559	27	164	14

80MAU21.5L • 80MAU22.2L
80MAU21.5 • 80MAU22.2

Specifications

Item		Description
Limits of use	Liquid Temp	0~40°C
	Applications	Wastewater and Sewage
	Submersion Depth	100feet (30m)
Type	Frequency	50Hz
	Motor	2P • Dry motor
	Insulation	Class B (2-5HP : Class F)
	Protection	IP68
	Protector	Auto cut
	Bearing	Ball type
	M.seal	Double M.seal
	Impeller	Vortex
Material	Upper Cover	Cast Iron
	Motor Frame	Cast Iron
	Main Shaft	SS403
	M.seal	Lower: Silicon/Silicon Upper: Carbon/Ceramic
	Casing	Cast Iron
	Impeller	Cast Iron
	Cable	VCT or H07RN-F or SJOW/SOW
Optional		Float Switch (5HP : none)

80MAU21.5 80MAU22.2
80MAU21.5L 80MAU22.2L

U Type
Vortex Impeller

Performance Curves

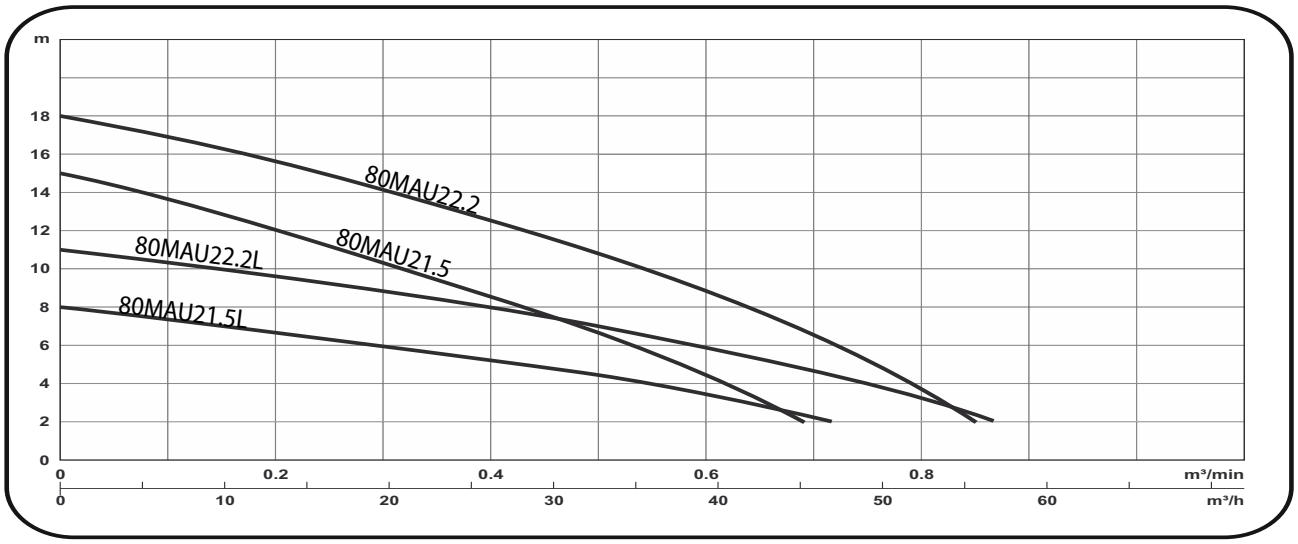

Model	Power HP (kW)	Discharge inch (mm)	Q:m³/min	0.1	0.2	0.3	0.4	0.5	0.6	0.8	0.9
			Q:m³/h	6	12	18	24	30	36	48	54
80MAU21.5L	2 (1.5)	3" (80)	H (m)	7.5	6.9	6.2	5.4	4.5	3.5	0.8	--
80MAU22.2L	3 (2.2)	3" (80)		10.5	9.8	9	8.1	7	5.7	2.8	--
80MAU21.5	2 (1.5)	3" (80)		13.7	12.1	10.4	8.5	6.3	3.9	--	--
80MAU22.2	3 (2.2)	3" (80)		17	15.7	14.3	12.5	10.5	8.3	3.1	--

Model	Power HP (kW)	Discharge inch (mm)	Standard m - m³/h	Max m - m³/h	Solid Passage mm	Weight (W/O Cable) 1ø - kg	3ø - kg	Phase Voltage	1ø 220V	1ø 230V	1ø 240V	3ø 230V	3ø 380V	3ø 400V	3ø 415V
80MAU21.5L	2 (1.5)	3" (80)	4.5-30	8-51	76	43	39	Full Load Ampere	10.4	10.0	9.8	6.1	3.6	3.4	3.4
80MAU22.2L	3 (2.2)	3" (80)	7-30	11-57	76	45	41		15.6	14.6	14.4	8.6	5.1	5.0	4.8
80MAU21.5	2 (1.5)	3" (80)	8.5-24	15-45	50	40	36		10.4	10.0	9.8	6.1	3.6	3.5	3.4
80MAU22.2	3 (2.2)	3" (80)	12.5-24	18-54	50	42	38		15.0	14.6	14.4	8.6	5.1	5.0	4.8

Dimensions

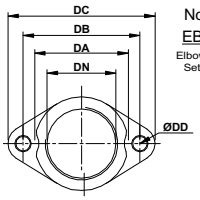

Nomenclature :

EB 3 - 130

Elbow Set | Discharge (inch-DN) | Outlet PCD (mm-DB)

Thread Available	
PF	NPT

EB3-130

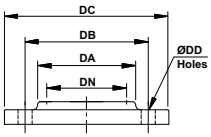

Thread Available	
PT (BSP.Tr.)	NPT

EB3-150

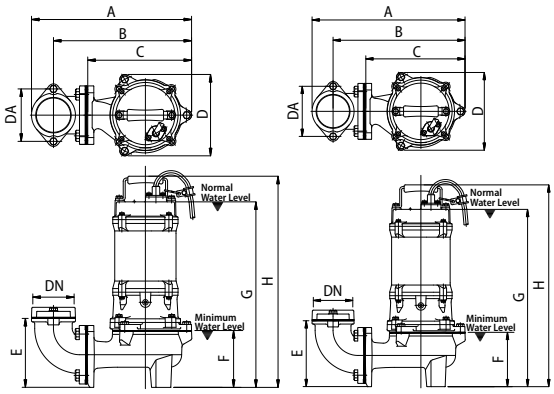

80MAU21.5L • 80MAU22.2L 80MAU21.5 • 80MAU22.2

Elbow (flange) set	Application Model	Dimensions [mm]					Holes
		DN	DA	DB	DC	DD	
EB3-130	80MAU21.5L	80	109	130	155	12	2
EB3-130	80MAU22.2L	80	109	130	155	12	2
EB3-130	80MAU21.5	80	109	130	155	12	2
EB3-130	80MAU22.2	80	109	130	155	12	2

Model			Dimensions [mm]									
	DN	DA	A	B	C	D	E	F	G		H	
									1ø	3ø	1ø	3ø
80MAU21.5L	80	130	443	389	305	255	232	235	635	557	700	622
80MAU22.2L	80	150	538	445	422	289	267	235	620		695	
80MAU21.5	80	130	379	258	241	202	204	140	511	460	575	524
80MAU22.2	80	130	379	258	241	202	204	140	544	460	607	524

GRS (Guid Rail System) Dimensions

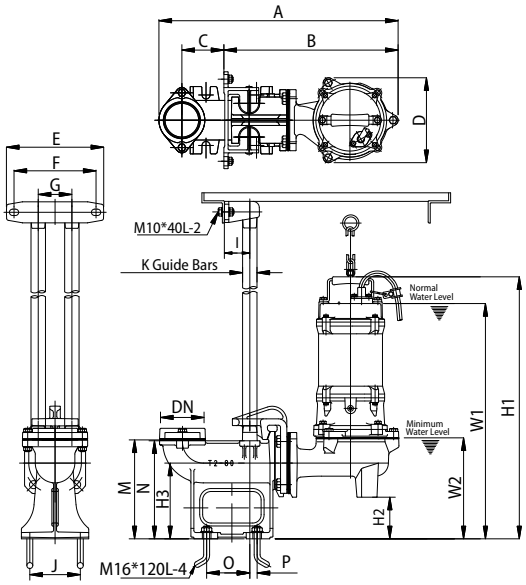

80MAU21.5 • 80MAU22.2 : GRS T2-80

Model	Dimensions [mm]																					
	DN	A	B	C	D	E	F	G	I	J	K	M	N	O	P	W1		W2	H1		H2	H3
																1ø	3ø		1ø	3ø		
80MAU21.5L	80	640	480	100	290	195	195	80	60	120	32	235	233	103	18	682	604	282	746	668	47	180
80MAU22.2L	80	734	511	130	313	230	195	80	60	150	32	285	233	135	15	647		282	772		47	180
80MAU21.5	80	569	414	100	202	230	195	80	60	120	32	235	233	103	18	610	559	240	674	623	99	180
80MAU22.2	80	569	414	100	202	230	195	80	60	120	32	235	233	103	18	643	559	240	707	623	99	180

80MAU23.7A • 80MAU23.7LA

Specifications

Item		Description
Limits of use	Liquid Temp	0~40°C
	Applications	Wastewater and Sewage
	Submersion Depth	100feet (30m)
Type	Frequency	50Hz
	Motor	2P • Dry motor
	Insulation	Class F
	Protection	IP68
	Protector	Auto cut
	Bearing	Ball type
	M.seal	Double M.seal
	Impeller	Semi-open
Material	Upper Cover	Cast Iron
	Motor Frame	Cast Iron
	Main Shaft	SS403
	M.seal	Lower: Silicon/Silicon Upper: Carbon/Ceramic
	Casing	Cast Iron
	Casing Cover	Cast Iron
	Impeller	Cast Iron
	Cable	VCT or H07RN-F or SOW

80MAU23.7A

80MAU23.7LA

U Type
Semi-open Impeller

Performance Curves

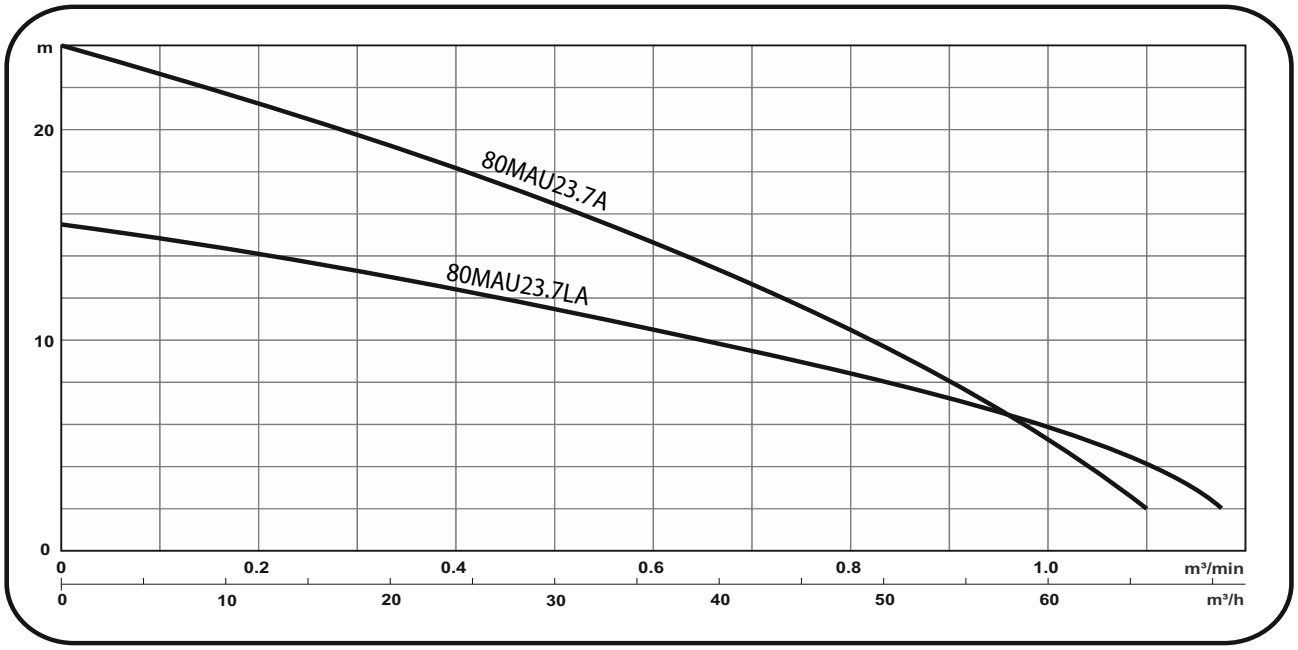

Model	Power HP (kW)	Discharge inch (mm)	Q:m³/min	0.2	0.4	0.6	0.7	0.8	0.9	1	1.1
			Q:m³/h	12	24	36	42	48	54	60	66
80MAU23.7A	5 (3.7)	3" (80)	H (m)	21.2	18.2	14.6	12.7	10.5	8.1	5.3	2
80MAU23.7LA	5 (3.7)	3" (80)		14.1	12.4	10.5	9.5	8.4	7.2	5.8	4.2

Model	Power HP (kW)	Discharge inch (mm)	Standard m - m³/h	Max m - m³/h	Solid Passage mm	Weight (W/O Cable) 1ø - kg	3ø - kg	Phase Voltage	1ø 220V	3ø 220V	3ø 230V	3ø 380V	3ø 440V	3ø 460V	3ø 525V
80MAU23.7A	5 (3.7)	3" (80)	16.5-30	24-69	32	--	46	Full Load Ampere	--	14.2	14.0	8.4	7.1	7.0	6.2
80MAU23.7LA	5 (3.7)	3" (80)	10.5-36	15.5-72	76	--	48		--	14.2	14.0	8.4	7.1	7.0	6.2

Dimensions

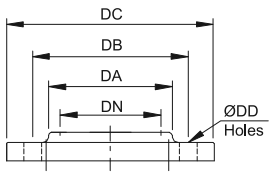

Thread Available	
PT (BSP.Tr.)	NPT

EF3-150

Nomenclature : EF 3 - 150
Flange Set / Discharge (inch-DN) / Pitch Circle Diameter (mm-DB)

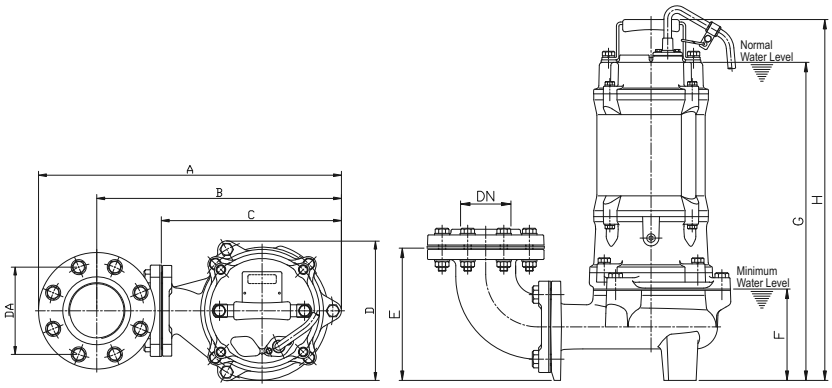

80MAU23.7A • 80MAU23.7LA

Elbow (flange) set	Application Model	Dimensions [mm]					Holes
		DN	DA	DB	DC	DD	
EF3-150	80MAU23.7A	80	110	150	185	15	8
EF3-150	80MAU23.7LA	80	110	150	185	15	8

Model	Dimensions [mm]									
	DN	DA	A	B	C	D	E	F	G	H
80MAU23.7A	80	130	481	389	286	222	210	145	505	573
80MAU23.7LA	80	130	481	389	286	235	246	197	557	625

GRS (Guid Rail System) Dimensions

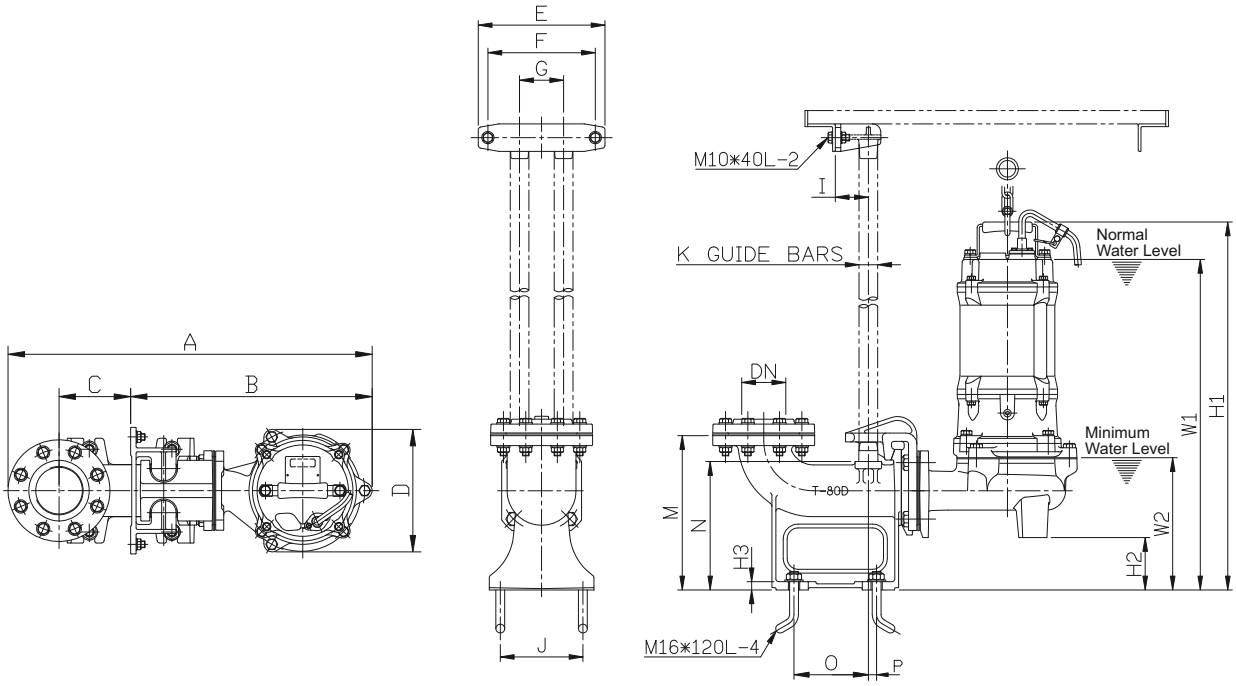

80MAU23.7A • 80MAU23.7LA : GRS T-80D

Model	Dimensions [mm]																			
	DN	A	B	C	D	E	F	G	I	J	K	M	N	O	P	W1	W2	H1	H2	H3
80MAU23.7A	80	662	439	130	290	230	195	80	60	150	32	280	233	135	15	600	240	688	95	15
80MAU23.7LA	80	662	439	130	235	230	195	80	60	150	32	280	233	135	15	616	256	684	59	15

80MAU25.5 • 80MAU27.5 • 80MAU211

Specifications

Item		Description
Limits of use	Liquid Temp	0 ~ 40 °C
	Applications	Wastewater /Sewage/Industrial Wastewater
Type	Frequency	50Hz
	Motor	2P(3000rpm) • Dry motor
	Insulation	Class H
	Protection	IP68
	Protector	Auto cut(7.5~10HP).MTS &MS (15HP)
	Bearing	Ball type
	M.seal	Double M.seal
	Impeller	Vortex Impeller
Material	Outer Cover	Cast Iron
	Motor Frame	Cast Iron
	Main Shaft	SS403(7.5~10HP).SUS420J2(15HP)
	M.seal	Lower: Silicon/Silicon Upper: Carbon/Ceramic
	Casing	Cast Iron
	Impeller	Cast Iron
	Cable	VCT or H07RN-F or SJOW/SOW
Optional		--

80MAU25.5

80MAU27.5

U Type
Vortex Impeller

Performance Curves

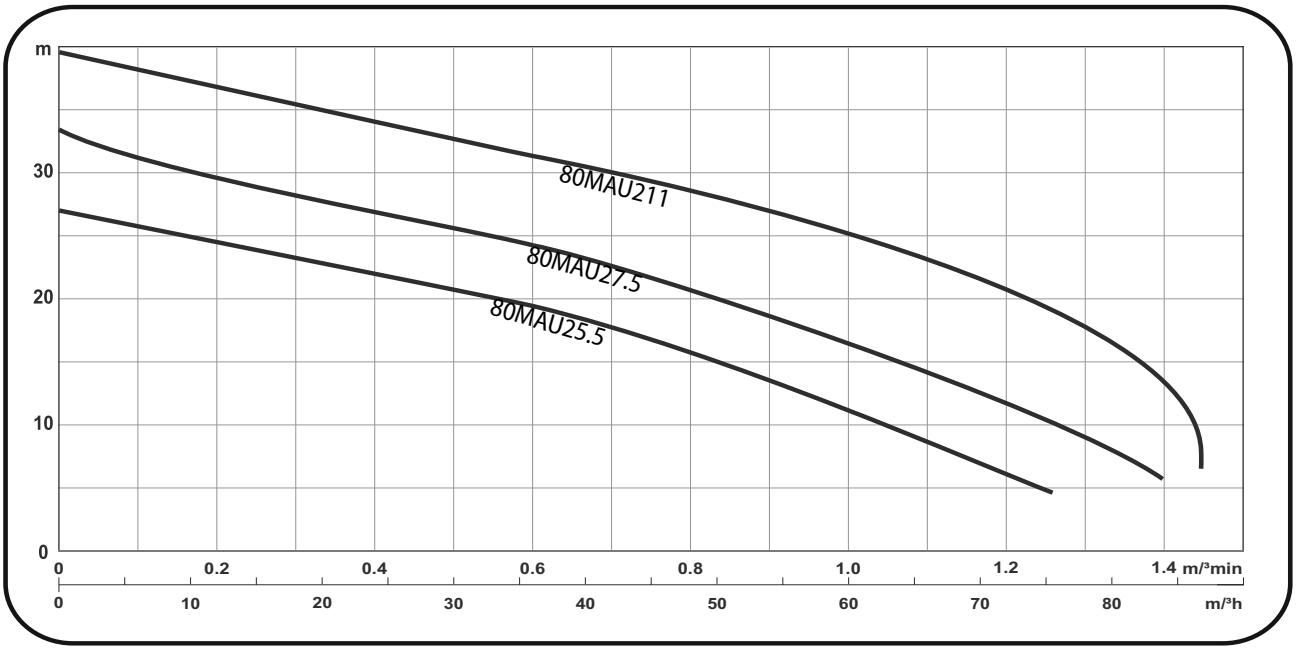

Model	Power HP (kW)	Discharge inch (mm)	Q:m³/min	0.2	0.4	0.6	0.8	1	1.2	1.3	1.4
			Q:m³/h	12	24	36	48	60	72	78	84
80MAU25.5	7.5 (5.5)	3" (80)	H (m)	24.5	21.9	19.5	15.6	11	5.8	--	--
80MAU27.5	10 (7.5)	3" (80)		29.5	26.8	24.2	20.6	16.5	11.9	6	--
80MAU211	15 (11)	3" (80)		36.8	34	31.4	28.6	25.2	20.4	17.5	13.4

Model	Power HP (kW)	Discharge inch (mm)	Standard m - m³/h	Max m - m³/h	Solid Passage mm	Weight (W/O Cable) 1ø - kg	3ø - kg	Phase Voltage	1ø 220V	1ø 230V	3ø 230V	3ø 380V	3ø 400V	3ø 415V	3ø 525V
80MAU25.5	7.5 (5.5)	3" (80)	19.5-36	27.5-87	50	--	68	Full Load Ampere	--	--	20.2	11.7	11.3	11.2	8.8
80MAU27.5	10 (7.5)	3" (80)	24.5-36	34-87	50	--	74		--	--	26.0	15.3	14.5	14.4	11.4
80MAU211	15 (11)	3" (80)	31.5-60	40-90	50	--	85		--	--	39.0	22.2	21.6	21.6	17.1

Dimensions

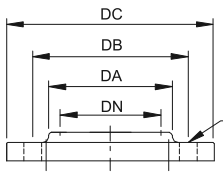

Thread Available	
PT (BSP.Tr.)	NPT

EF3-150

Nomenclature : EF 3 - 150
Flange Set / Discharge (inch-DN) / Pitch Circle Diameter (mm-DB)

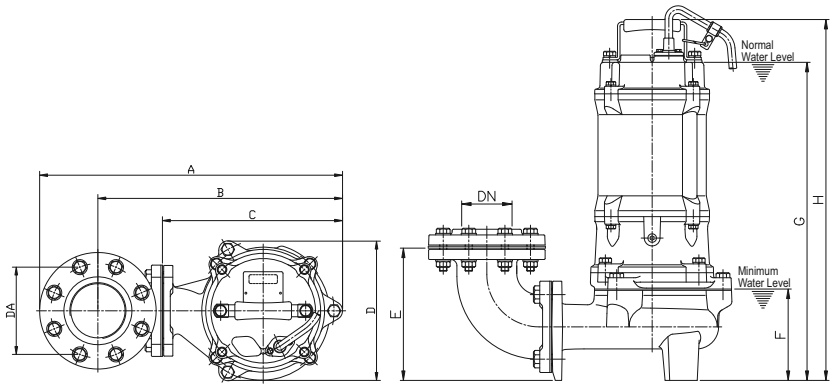

80MAU25.5 • 80MAU27.5 • 80MAU211

Elbow (flange) set	Application Model	Dimensions [mm]					Holes
		DN	DA	DB	DC	DD	
EB3-150A	80MAU25.5	80	110	150	185	15	8
EB3-150A	80MAU27.5	80	110	150	185	15	8
EB3-150A	80MAU211	80	110	150	185	15	8

Model	Dimensions [mm]									
	DN	DA	A	B	C	D	E	F	G	H
80MAU25.5	80	130	501	412	309	258	206	147	566	665
80MAU27.5	80	130	501	412	309	258	206	147	566	665
80MAU211	80	130	501	412	309	258	206	147	606	705

GRS (Guid Rail System) Dimensions

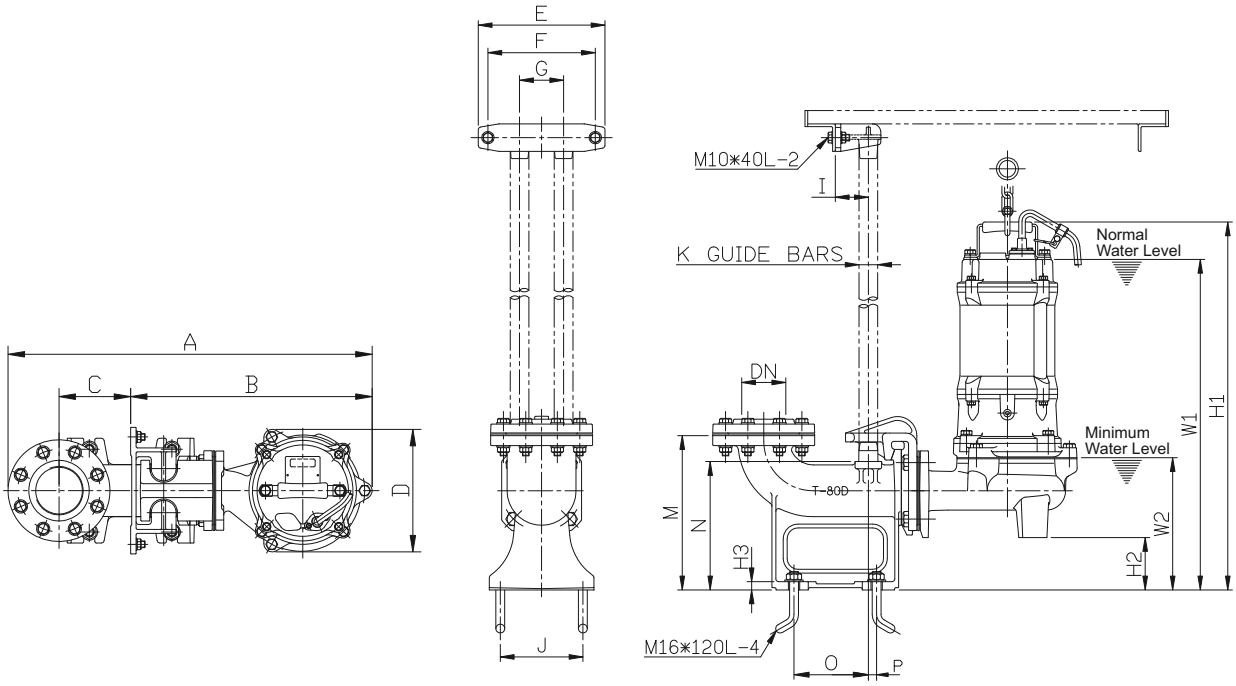

80MAU25.5 • 80MAU27.5 • 80MAU211 : GRS T-80DH

Model	Dimensions [mm]																			
	DN	A	B	C	D	E	F	G	I	J	K	M	N	O	P	W1	W2	H1	H2	H3
80MAU25.5	80	764	542	130	258	230	195	80	60	150	32	280	233	135	15	660	241	759	94	15
80MAU27.5	80	764	542	130	258	230	195	80	60	150	32	280	233	135	15	660	241	759	94	15
80MAU211	80	764	542	130	258	230	195	80	60	150	32	280	233	135	15	700	241	799	94	15

80MAU25.5L • 80MAU27.5L • 80MAU211L

Specifications

Item		Description
Limits of use	Liquid Temp	0 ~ 40 °C
	Applications	Wastewater /Sewage/Industrial Wastewater
Type	Frequency	50Hz
	Motor	2P(3000rpm) • Dry motor
	Insulation	Class H
	Protection	IP68
	Protector	Auto cut(7.5~10HP).MTS &MS (15HP)
	Bearing	Ball type
	M.seal	Double M.seal
	Impeller	Vortex Impeller
Material	Outer Cover	Cast Iron
	Motor Frame	Cast Iron
	Main Shaft	SS403(7.5~10HP).SUS420J2(15HP)
	M.seal	Lower: Silicon/Silicon Upper: Carbon/Ceramic
	Casing	Cast Iron
	Impeller	Cast Iron
	Cable	VCT or H07RN-F or SJOW/SOW
Optional		--

80MAU25.5L

80MAU27.5L

U Type
Vortex Impeller

Performance Curves

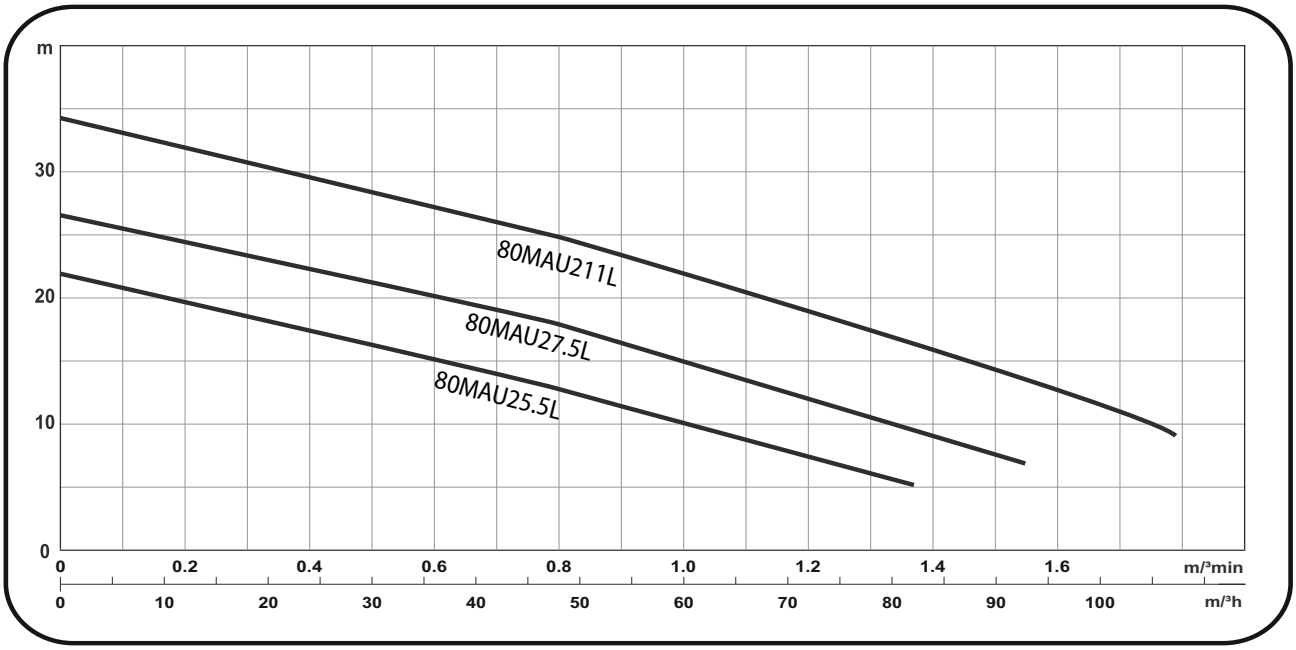

Model	Power HP (kW)	Discharge Inch (mm)	Q:m³/min	0.2	0.4	0.6	0.8	1	1.2	1.4	1.6
			Q:m³/h	12	24	36	48	60	72	84	96
80MAU25.5L	7.5 (5.5)	3" (80)	H (m)	19.7	17.4	15.2	12.8	10.1	7.4	--	--
80MAU27.5L	10 (7.5)	3" (80)		24.4	22.3	20.2	18.0	15.0	12.0	9.0	--
80MAU211L	15 (11)	3" (80)		31.9	29.6	27.2	24.8	22.0	19.0	15.9	12.7

Model	Power HP (kW)	Discharge inch (mm)	Standard m - m³/h	Max m - m³/h	Solid Passage mm	Weight (W/O Cable) 1ø - kg	3ø - kg	Phase Voltage	1ø 220V	1ø 230V	3ø 230V	3ø 380V	3ø 400V	3ø 415V	3ø 525V
80MAU25.5L	7.5 (5.5)	3" (80)	13 - 48	22 - 84	76	--	70	Full Load Ampere	--	--	20.2	11.7	11.3	11.2	8.8
80MAU27.5L	10 (7.5)	3" (80)	17.5 - 48	27 - 96	76	--	76		--	--	26.0	15.3	14.5	14.4	11.4
80MAU211L	15 (11)	3" (80)	24.5 - 48	34 - 111	76	--	87		--	--	39.0	22.2	21.6	21.6	17.1

Dimensions

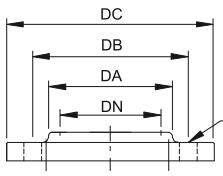

Thread Available	
PT (BSP.Tr.)	NPT

EF3-150

Nomenclature : EF 3 - 150
Flange Set / Discharge (inch-DN) / Pitch Circle Diameter (mm-DB)

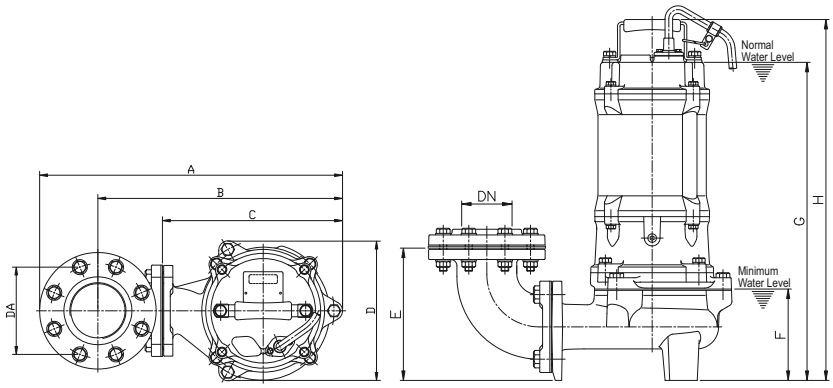

80MAU25.5L • 80MAU27.5L • 80MAU211L

Elbow (flange) set	Application Model	Dimensions [mm]					Holes
		DN	DA	DB	DC	DD	
EB3-150A	80MAU25.5L	80	110	150	185	15	8
EB3-150A	80MAU27.5L	80	110	150	185	15	8
EB3-150A	80MAU211L	80	110	150	185	15	8

Model	Dimensions [mm]									
	DN	DA	A	B	C	D	E	F	G	H
80MAU25.5L	80	130	506	417	314	273	242	199	618	717
80MAU27.5L	80	130	506	417	314	273	242	199	618	717
80MAU211L	80	130	506	417	314	273	242	199	658	757

GRS (Guid Rail System) Dimensions

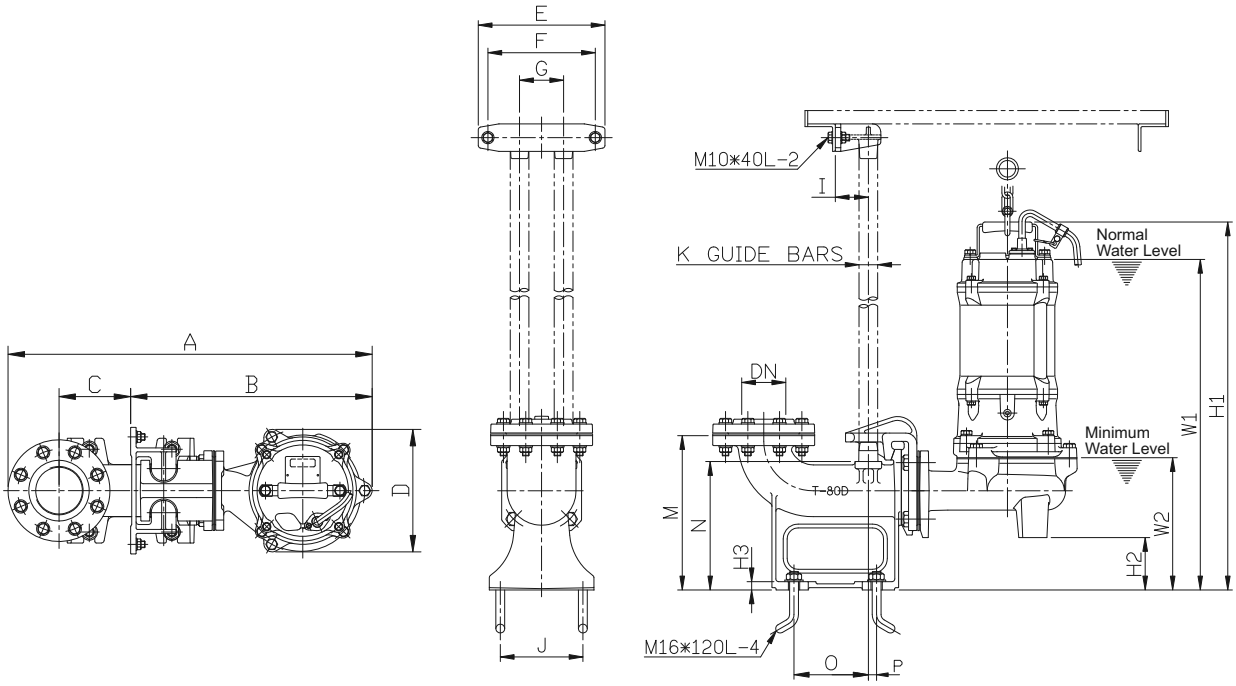

80MAU25.5L • 80MAU27.5L • 80MAU211L : GRS T-80DH

Model	Dimensions [mm]																			
	DN	A	B	C	D	E	F	G	I	J	K	M	N	O	P	W1	W2	H1	H2	H3
80MAU25.5L	80	769	547	130	273	230	195	80	60	150	32	280	233	135	15	676	257	775	58	15
80MAU27.5L	80	769	547	130	273	230	195	80	60	150	32	280	233	135	15	676	257	775	58	15
80MAU211L	80	769	547	130	273	230	195	80	60	150	32	280	233	135	15	716	257	815	58	15

50MAU4.4 • 50MAU4.8
80MAU41.5 • 80MAU42.2 • 80MAU43.7

Specifications

Item		Description
Limits of use	Liquid Temp	0~40°C
	Applications	Wastewater and Sewage
	Submersion Depth	100feet (30m)
Type	Frequency	50Hz
	Motor	4P • Dry motor
	Insulation	Class B (2-5HP : Class F)
	Protection	IP68
	Protector	Auto cut
	Bearing	Ball type
	M.seal	Double M.seal
	Impeller	Vortex
Material	Upper Cover	Cast Iron
	Motor Frame	Cast Iron
	Main Shaft	SS403
	M.seal	Lower: Silicon/Silicon Upper: Carbon/Ceramic
	Casing	Cast Iron
	Impeller	Cast Iron
	Cable	VCT or H07RN-F or SJOW/SOW
Optional		Float switch (3HP & 5HP : none)

50MAU4.8

80MAU42.2

U Type
Vortex Impeller

Performance Curves

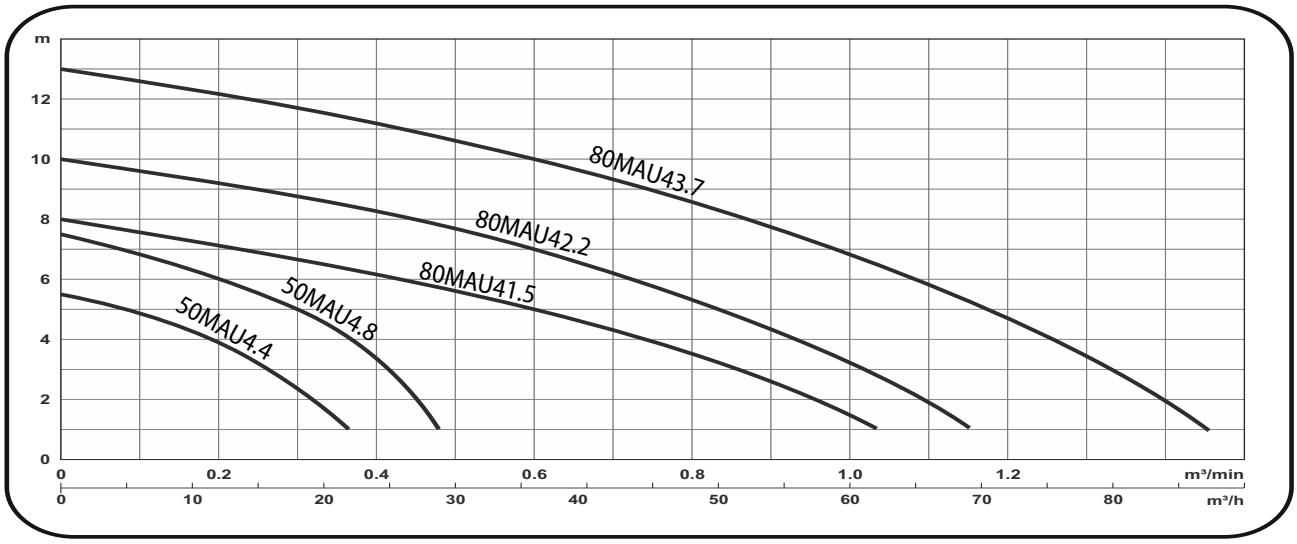

Model	Power HP (kW)	Discharge Inch (mm)	Q:m³/min	0.1	0.2	0.3	0.4	0.5	0.6	0.7	0.8	1	1.4
			Q:m³/h	6	12	18	24	30	36	42	48	60	84
50MAU4.4	½ (0.4)	2" (50)	H (m)	5.1	4.1	2.7	--	--	--	--	--	--	--
50MAU4.8	1 (0.75)	2" (50)		7.1	6.2	5	3.1	--	--	--	--	--	--
80MAU41.5	2 (1.5)	3" (80)		7.8	7.4	6.9	6.4	5.7	5	4.2	3.3	1.3	--
80MAU42.2	3 (2.2)	3" (80)		9.7	9.4	8.9	8.4	7.7	7	6.1	5.1	3	--
80MAU43.7	5 (3.7)	3" (80)		12.7	12.3	11.9	11.3	10.7	10	9.2	8.2	6.2	1.4

Model	Power HP (kW)	Discharge inch (mm)	Standard m - m³/h	Max m - m³/h	Solid Passage mm	Weight (W/O Cable) 1ø - kg	Weight (W/O Cable) 3ø - kg	Phase Voltage	1ø 220V	1ø 230V	1ø 240V	3ø 230V	3ø 380V	3ø 400V	3ø 415V
50MAU4.4	½ (0.4)	2" (50)	3.5-15	5.5-24	50	30	28	Full Load Ampere	3.2	3.1	3.0	2.2	1.3	1.3	1.2
50MAU4.8	1 (0.75)	2" (50)	5-18	7.5-30	50	31	29		5.4	5.2	5.1	3.5	2.1	2.0	2.0
80MAU41.5	2 (1.5)	3" (80)	5-36	8-66	76	52	52		10.4	10.2	10.0	6.6	3.9	3.8	3.6
80MAU42.2	3 (2.2)	3" (80)	7-36	10-72	76	--	70		--	--	--	9.2	5.5	5.4	5.1
80MAU43.7	5 (3.7)	3" (80)	10-36	13-90	76	--	75		--	--	--	15.2	8.8	8.8	8.4

Dimensions

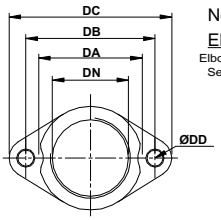

Nomenclature :

EB 2 - 96

Elbow Set | Discharge (inch-DN) | Outlet PCD (mm-DB)

Thread Available	
PF	NPT

EB2-96 • EB3-130

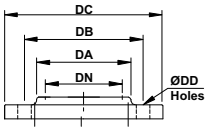

Thread Available	
PT (BSP.Tr.)	NPT

EB3-150(145)

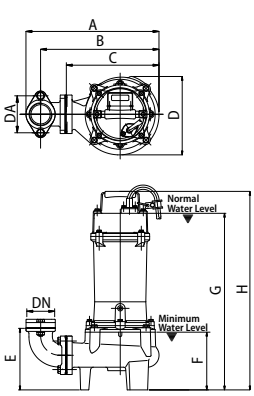

50MAU4.4 • 50MAU4.8

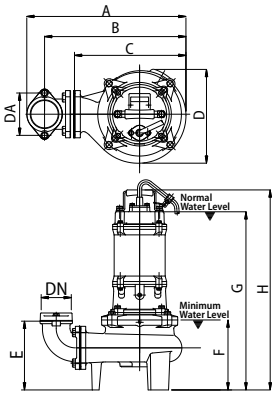

80MAU41.5

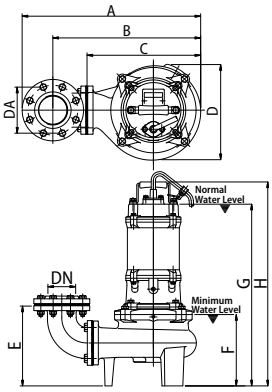

80MAU42.2 • 80MAU43.7

Elbow (flange) set	Application Model	Dimensions [mm]					Holes
		DN	DA	DB	DC	DD	
EB2-96	50MAU4.4	50	77	96	121	12	2
EB2-96	50MAU4.8	50	77	96	121	12	2
EB3-130	80MAU41.5	80	109	130	155	12	2
EB3-150	80MAU42.2	80	110	150	185	15	8
EB3-150	80MAU43.7	80	110	150	185	15	8

Model			Dimensions [mm]									
	DN	DA	A	B	C	D	E	F	G		H	
									1ø	3ø	1ø	3ø
50MAU4.4	50	96	346	308	241	204	160	150	459	459	516	516
50MAU4.8	50	96	346	308	241	204	160	150	459	459	516	516
80MAU41.5	80	130	443	389	305	255	232	235	635	557	700	622
80MAU42.2	80	150	538	445	422	289	267	235	600	600	675	675
80MAU43.7	80	150	538	445	422	289	267	235	620	620	695	695

GRS (Guid Rail System) Dimensions

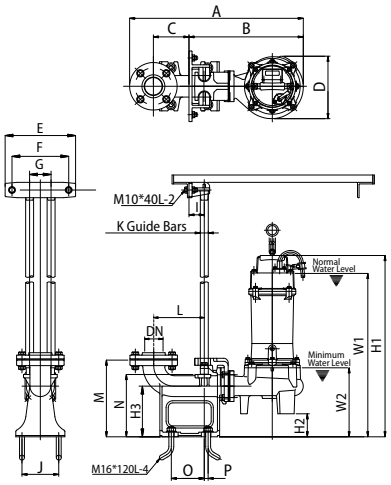

50MAU4.4 • 50MAU4.8 : GRS T50F

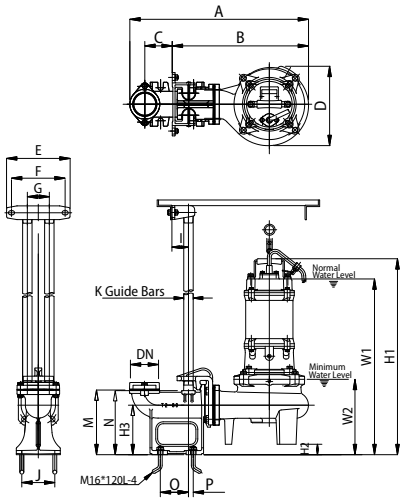

80MAU41.5 : GRS T2-80

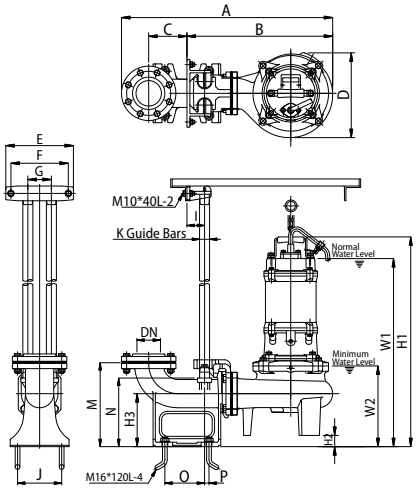

80MAU42.2 • 80MAU43.7 : GRS T80D

Model	Dimensions [mm]																						
	DN	A	B	C	D	E	F	G	I	J	K	L	M	N	O	P	W1		W2	H1		H2	H3
																	1ø	3ø		1ø	3ø		
50MAU4.4	50	567	373	116	204	230	185	70	50	120	25	165	250	203	108	13	533	533	225	591	591	75	165
50MAU4.8	50	567	373	116	204	230	185	70	50	120	25	165	250	203	108	13	533	533	225	591	591	75	165
80MAU41.5	80	640	480	100	290	195	195	80	60	120	32	--	235	233	103	18	682	504	282	746	668	47	180
80MAU42.2	80	734	511	130	313	230	195	80	60	150	32	--	285	233	135	15	647	547	282	722	722	47	180
80MAU43.7	80	734	511	130	313	230	195	80	60	150	32	--	285	233	135	15	667	567	282	742	742	47	180

100MAU45.5 • 100MAU47.5

Specifications

Item		Description
Limits of use	Liquid Temp	0~40°C
	Applications	Wastewater and Sewage
	Submersion Depth	100feet (30m)
Type	Frequency	50Hz
	Motor	4P • Dry motor
	Insulation	Class H
	Protection	IP68
	Protector	Auto cut
	Bearing	Ball type
	M.seal	Double M.seal
	Impeller	Semi-open
Material	Upper Cover	Cast Iron
	Motor Frame	Cast Iron
	Main Shaft	SS420J2
	M.seal	Lower: Silicon/Silicon Upper: Carbon/Ceramic
	Casing	Cast Iron
	Impeller	Cast Iron
	Cable	VCT or H07RN-F or SJOW/SOW
Optional		-

100MAU45.5

U Type
Vortex Impeller

Performance Curves

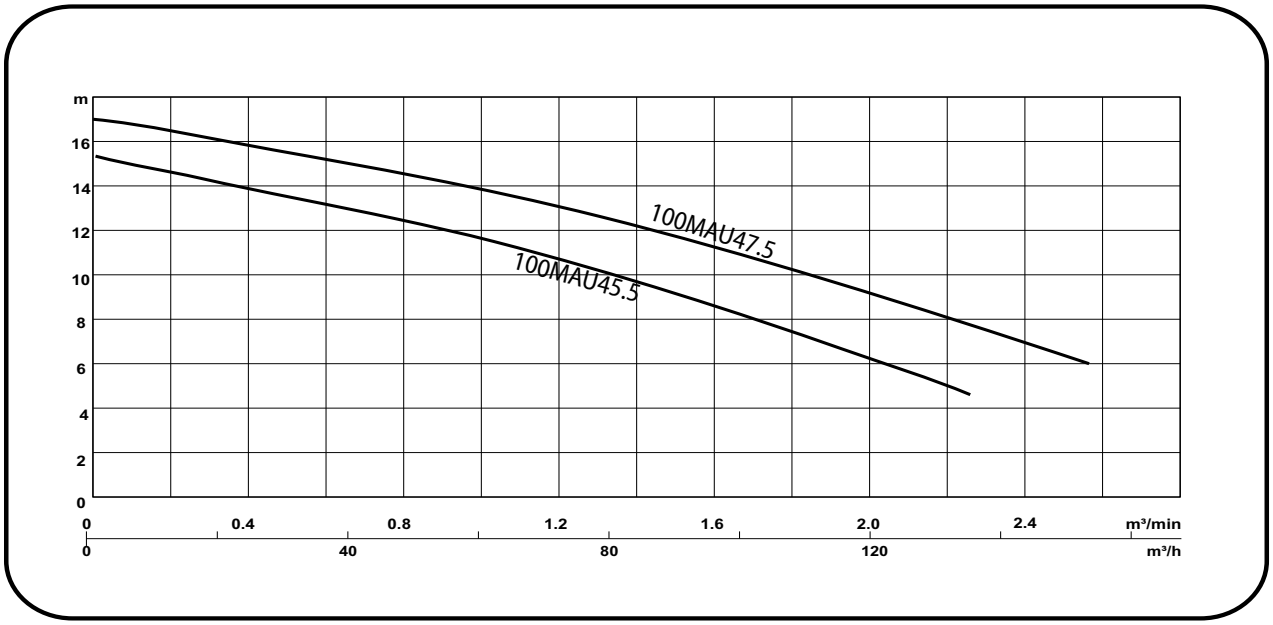

Model	Power HP(KW)	Discharge (mm)	Q:m³/min	0.4	0.6	0.8	1	1.2	1.6	2	2.4
			Q:m³/h	24	36	48	60	72	96	120	144
100MAU45.5	7.5(5.5)	4" (100)	H (m)	13.7	13.0	12.3	11.5	10.6	8.5	6.2	
100MAU47.5	10(7.5)	4" (100)		15.6	15.0	14.4	13.7	12.9	11.1	9.2	6.9

Model	Power HP(KW)	Discharge (mm)	Standard	Max	Solid passage mm	Weight(W/O cable)		Phase	1ø	1ø	3ø	3ø	3ø	3ø	3ø
			m-m³/h	m-m³/h		1ø kg	3ø kg	voltage	220V	230V	230V	380V	400V	415V	525V
100 MAU 45.5	7.5(5.5)	4" (100)	11.5-60	15.5-138	100.0		96	full load			22.2	12.6	12.3	12.3	9.8
100 MAU 47.5	10(7.5)	4" (100)	13.5-60	17.5-156	100.0	--	105	Ampere	--	--	28.8	16.3	16.0	16.0	12.6

Dimensions

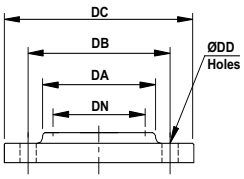

Thread Available	
PT (BSP.Tr.)	NPT

EB4-175

Nomenclature : EB 4 - 175

Elbow Set — Discharge (inch-DN) — Outlet PCD (mm-DB)

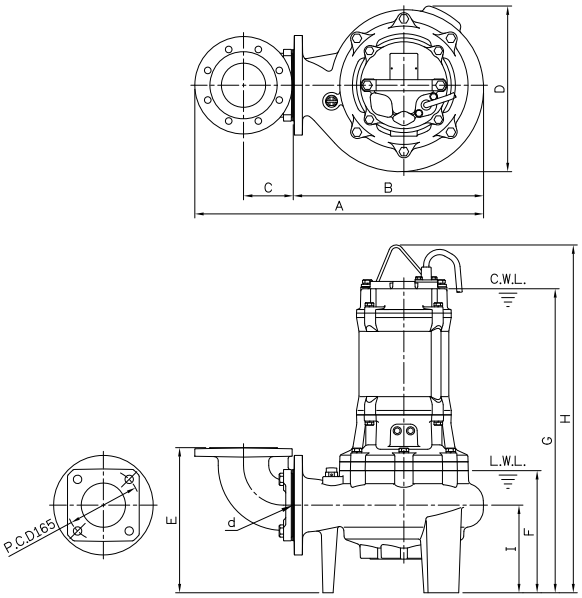

100MAU45.5• 100MAU47.5

Elbow (Flange)set	Application model	Dimensions [mm]				Holes
		DN	DB	DC	DD	
EB4-175(145)	100MAU45.5	100	175	210	15	8
EB4-175(145)	100MAU47.5	100	175	210	15	8

Model	Dimensions [mm]									
	d	A	B	C	D	E	F	G	H	I
100 MAU45.5	100	615	393	113	337	310	303	714	813	180
100MAU47.5	100	615	393	113	337	310	303	754	853	180

GRS (Guid Rail System) Dimensions

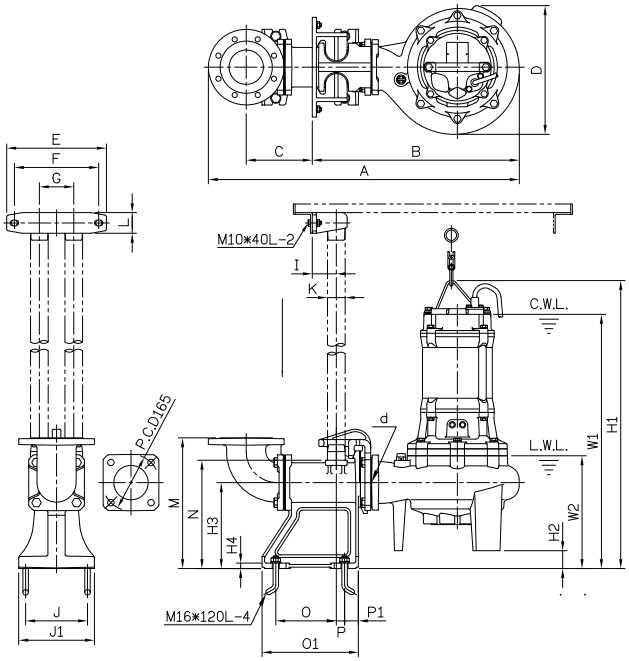

100MAU45.5• 100MAU47.5 : GRS T100 B

Model	Dimensions [mm]																					
	DN	A	B	C	D	E	F	G	I	J	J1	K	L	M	N	O	O1	P	P1	W1	W2	H1	H2
100MAU45.5	100	869	567	192	337	290	245	100	70	180	220	50	60	380	315	176	280	24	40	784	373	883	70
100MAU47.5	100	869	567	192	337	290	245	100	70	180	220	50	60	380	315	176	280	24	40	824	373	823	70

80MAC21.5 • 80MAC22.2, 80 MAC23.7

Specifications

Item		Description
Limits of use	Liquid Temp	0~40℃
	Applications	Wastewater and Sewage
	Submersion Depth	100feet (30m)
Type	Frequency	50Hz
	Motor	2P • Dry motor
	Insulation	Class F
	Protection	IP68
	Protector	Auto cut
	Bearing	Ball type
	M.seal	Double M.seal
	Impeller	Semi-Open
Material	Upper Cover	Cast Iron
	Motor Frame	Cast Iron
	Main Shaft	SS403
	M.seal	Lower: Silicon/Silicon Upper: Carbon/Ceramic
	Casing	Cast Iron
	Casing Cover	Cast Iron (Heat treatment)
	Impeller	Cast Iron (heat treatment)+Tungsten
	Cable	VCT or H07RN-F or SJOW/SOW
Optional		Float switch

80MAC21.5
80MAC22.2

80MAC21.5F
80MAC22.2F

C Type
Semi-open Impeller

MAC Series
Patent Design Casing Cover

Performance Curves

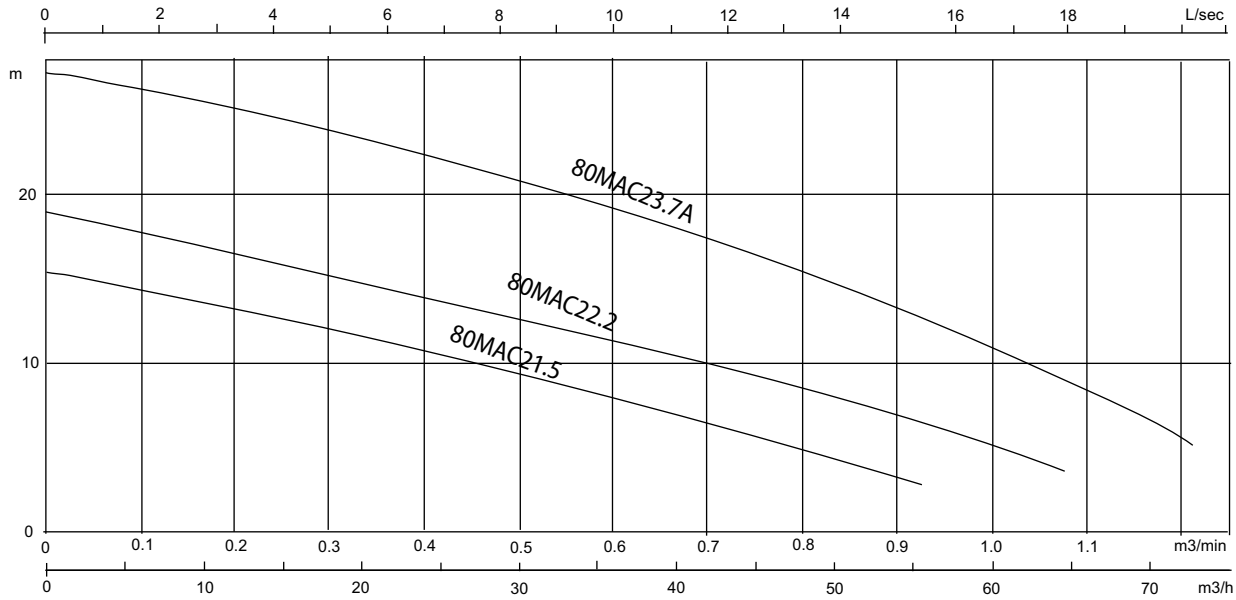

Model	Power HP (kW)	Discharge Inch (mm)	Q:m³/min	0.1	0.2	0.3	0.4	0.5	0.6	0.8	1
			Q:m³/h	6	12	18	24	30	36	48	60
80MAC21.5	2 (1.5)	3" (80)	H (m)	14.3	13.2	12.0	10.7	9.3	7.8	4.8	--
80MAC22.2	3 (2.2)	3" (80)		17.6	16.4	15.1	13.8	12.5	11.2	8.5	5.1
80MAC23.7A	5 (3.7)	3" (80)		26.9	25.1	23.7	22.2	20.9	19	15.3	11.0

Model	Power HP (kW)	Discharge inch (mm)	Standard m - m³/h	Max m - m³/h	Solid Passage mm	Weight (W/O Cable) 1ø - kg	3ø - kg	Phase Voltage	1ø 220V	1ø 230V	3ø 230V	3ø 380V	3ø 400V	3ø 415V	3ø 525V
80MAC21.5	2 (1.5)	3" (80)	7.5 - 36	15 - 60	62	37	33	Full Load Ampere	10.2	10	6.1	3.6	3.4	3.4	2.7
80MAC22.2	3 (2.2)	3" (80)	11 - 36	18.5 - 69	62	40	35		15	14.6	8.6	5.1	5	4.8	3.8
80MAC23.7A	5 (3.7)	3" (80)	19-36	27.5-81	62	--	48		--	--	14	8.2	7.8	7.7	6.2

Dimensions

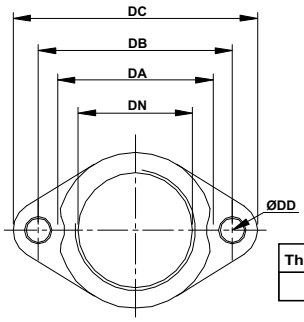

Thread Available	
PF	NPT

EB3-130

Nomenclature : EB 3 - 130

Elbow Set — Discharge (inch-DN) — Outlet PCD (mm-DB)

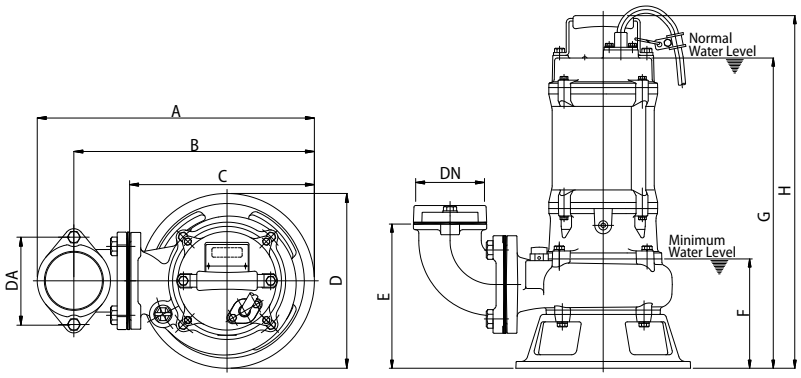

80MAC21.5 • 80MAC22.2 • 80MAC23.7

Elbow (flange) set	Application Model	Dimensions [mm]					Holes
		DN	DA	DB	DC	DD	
EB3-130	80MAC21.5	80	109	130	155	12	2
EB3-130	80MAC22.2	80	109	130	155	12	2
EF3-150	80MAC23.7A	80	110	150	185	15	8

Model			Dimensions [mm]									
	DN	DA	A	B	C	D	E	F	G		H	
									1ø	3ø	1ø	3ø
80MAC21.5	80	130	413	358	275	260	215	160	513	462	576	525
80MAC22.2	80	130	413	358	275	260	215	160	545	462	608	525
80MAC23.7A	80	130	500	408	305	290	255	176		510		578

GRS (Guid Rail System) Dimensions

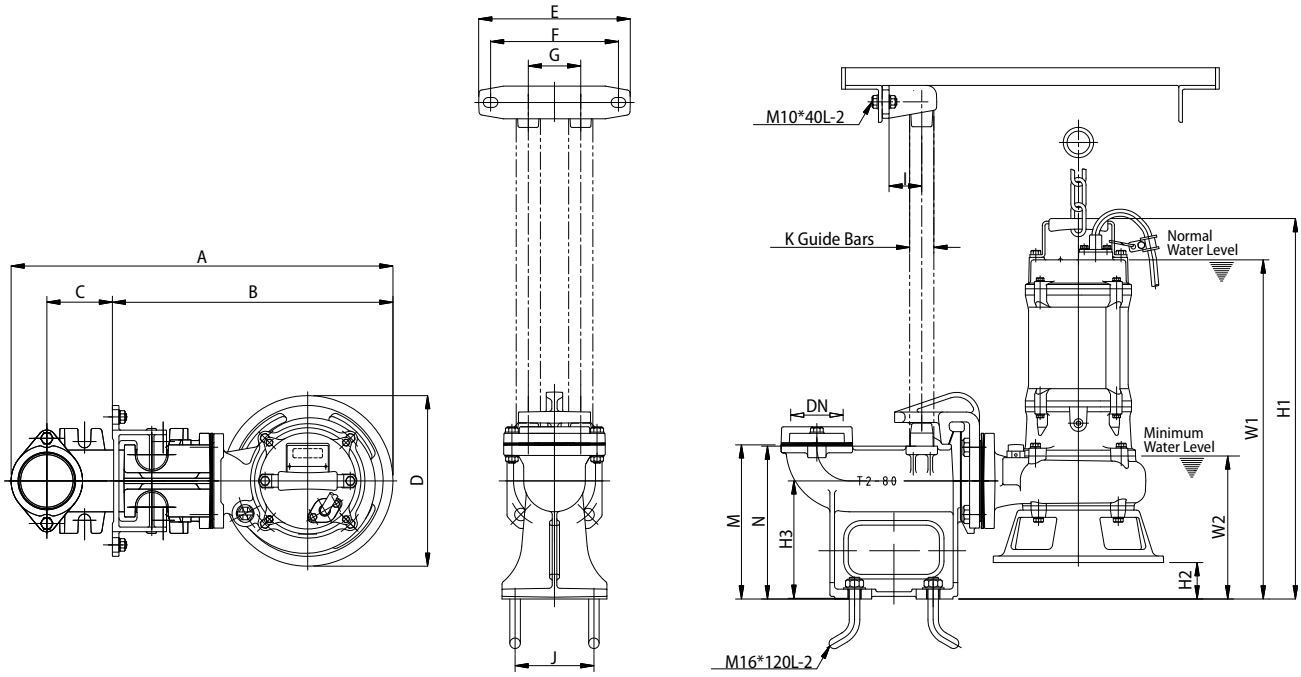

80MAC21.5 • 80MAC22.2 : GRS T2-80 • 80MAC23.7A : GRS T-80D

Model	Dimensions [mm]																			
	DN	A	B	C	D	E	F	G	I	J	K	M	N	W1		H1		W2	H2	H3
														1ø	3ø	1ø	3ø			
80MAC21.5	80	580	430	100	260	230	195	80	50	120	32	235	233	573	522	636	585	220	60	180
80MAC22.2	80	580	430	100	260	230	195	80	50	120	32	235	233	605	522	668	585	220	60	180
80MAC23.7A	80	681	485	130	290	230	195	80	60	150	32	280	233	560		628		226	50	15

80(100)MAC25.5 • 80(100)MAC27.5, 80 (100)MAC211

Specifications

Item		Description
Limits of use	Liquid Temp	0~40°C
	Applications	Wastewater and Sewage
	Submersion Depth	100feet (30m)
Type	Frequency	50Hz
	Motor	2P • Dry motor
	Insulation	Class H
	Protection	IP68
	Protector	Auto cut
	Bearing	Ball type
	M.seal	Double M.seal
	Impeller	Open
Material	Upper Cover	Cast Iron
	Motor Frame	Cast Iron
	Main Shaft	SUS403 (7.5-10HP). SUS420J(15HP)
	M.seal	Lower: Silicon/Silicon Upper: Carbon/Ceramic
	Casing	Cast Iron
	Casing Cover	Cast Iron (Heat treatment)
	Impeller	Cast Iron (heat treatment)+Tungsten
	Cable	VCT or H07RN-F or SOW

Performance Curves

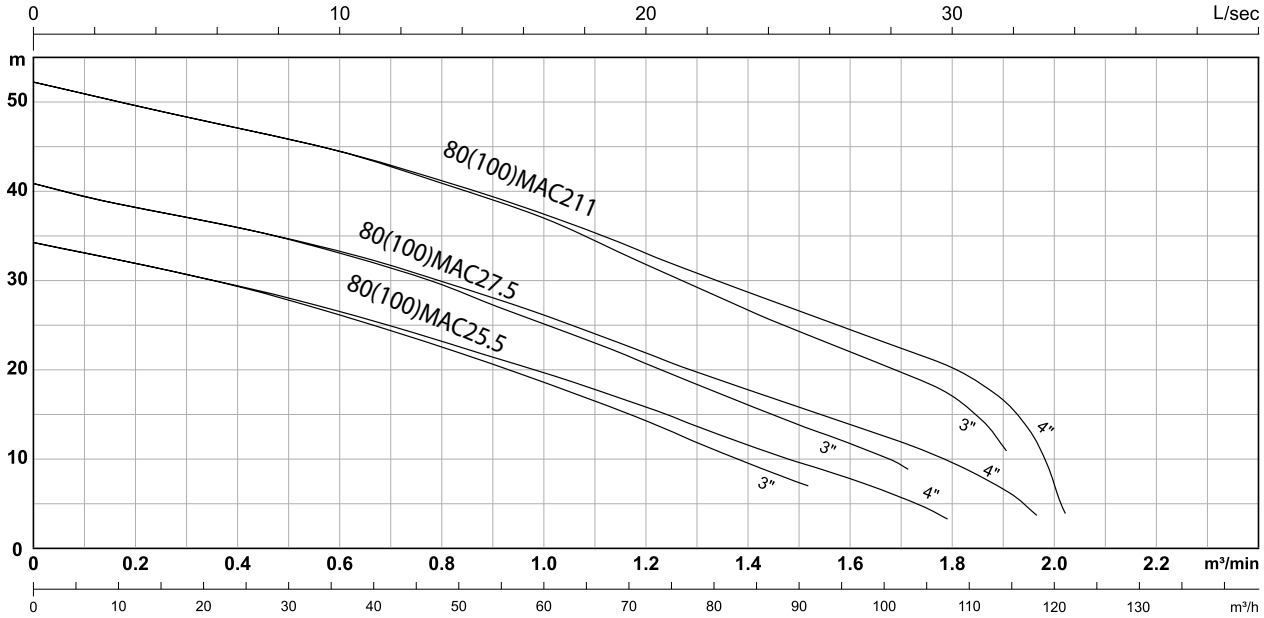

Model	Power HP (kW)	Discharge Inch (mm)	Q:m³/min	0.2	0.4	0.6	0.8	1	1.2	1.6	2
			Q:m³/h	12	24	36	48	60	72	96	120
80MAC25.5	7.5 (5.5)	3" (80)	H (m)	32.0	29.4	26.1	22.6	18.6	14.4	--	--
100MAC25.5	7.5 (5.5)	4"(100)		32.0	29.4	26.5	23.2	19.6	15.8	7.8	--
80MAC27.5	10 (7.5)	3" (80)		38.2	36.0	33.0	29.6	25.2	20.6	11.8	--
100MAC27.5	10 (7.5)	4"(100)		38.2	36.0	33.3	30.0	26.2	21.8	13.9	--
80MAC211	15 (11)	3" (80)		49.6	47.1	44.5	41.0	37.0	31.8	22.0	--
100MAC211	15 (11)	4"(100)		49.6	47.1	44.5	41.2	37.4	33.0	24.6	7.2

Model	Power HP (kW)	Discharge Inch (mm)	Standard m - m³/h	Max m - m³/h	Solid Passage mm	Weight (W/O Cable) 1ø - kg	3ø - kg	Phase Voltage	1ø 220V	1ø 230V	3ø 230V	3ø 380V	3ø 400V	3ø 415V	3ø 525V
80MAC25.5	7.5 (5.5)	3" (80)	26-36	34-39	67	--	75	Full Load Ampere	--	--	20.6	11.7	11.4	11.4	9.1
100MAC25.5	7.5 (5.5)	4"(100)	19.5-60	34-108	67	--	75		--	--	20.6	11.7	11.4	11.4	9.1
80MAC27.5	10 (7.5)	3" (80)	33-36	40.5-105	67	--	81		--	--	27.6	15.7	15.2	15.2	12.2
100MAC27.5	10 (7.5)	4"(100)	26-60	40.5-123	67	--	81		--	--	27.6	15.7	15.2	15.2	12.2
80MAC211	15 (11)	3" (80)	44-36	52-117	67	--	91		--	--	39	22.2	21.6	21.6	--
100MAC211	15 (11)	4"(100)	37-60	52-126	67	--	91		--	--	39	22.2	21.6	21.6	--

Dimensions

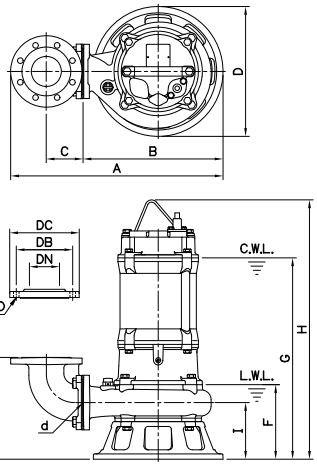

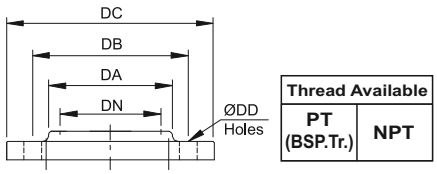

EF3-150

Nomenclature : EF_ 3_ - 150_
Flange Set / Discharge (inch-DN) / Pitch Circle Diameter (mm-DB)

80MAC25.5 • 80MAC27.5 • 80MAC211

Elbow (flange) set	Application Model	Dimensions [mm]				Holes
		DN	DB	DC	DD	
EB3-150A	80MAC25.5	80	150	185	15	8
EB4-175	100MAC25.5	100	175	210	15	8
EB3-150A	80MAC27.5	80	150	185	15	8
EB4-175	100MAC27.5	100	175	210	15	8
EB3-150A	80MAC211	80	150	185	15	8
EB4-175	100MAC211	100	175	210	15	8

Model		Dimensions [mm]									
	d	A	B	C	D	E	F	G	H	I	WT1
80MAC25.5	80	565	373	98	345	271	198	590	689	151	75
100MAC25.5	100	596	373	113	345	282	198	590	689	151	75
80MAC27.5	80	565	373	98	345	271	198	590	689	151	81
100MAC27.5	100	596	373	113	345	282	198	590	689	151	81
80MAC211	80	565	373	98	345	271	198	630	729	151	91
100MAC211	100	596	373	113	345	282	198	630	729	151	91

GRS (Guid Rail System) Dimensions

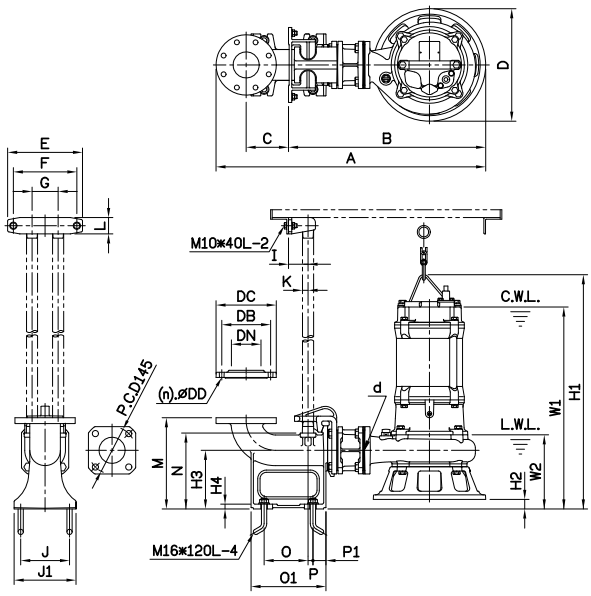

80MAC25.5 • 80MAC27.5 • 80MAC211 : GRS T80DH / T100(80)BH

Model	Dimensions [mm]																								
	d	A	B	C	D	E	F	G	I	J	J1	K	L	M	N	O	O1	P	P1	W1	W2	H1	H2	H3	H4	WT1
80MAC25.5	80	828	606	130	345	230	195	80	60	150	190	32	50	280	233	135	230	15	40	620	228	719	30	180	15	75
100MAC25.5	80	860	606	150	345	230	195	80	60	170	210	32	50	285	233	155	250	15	40	620	228	719	30	180	15	75
80MAC27.5	80	828	606	130	345	230	195	80	60	150	190	32	50	280	233	135	230	15	40	620	228	719	30	180	15	81
100MAC27.5	80	860	606	150	345	230	195	80	60	170	210	32	50	285	233	155	250	15	40	620	228	719	30	180	15	81
80MAC211	80	828	606	130	345	230	195	80	60	150	190	32	50	280	233	135	230	15	40	620	228	759	30	180	15	91
100MAC211	80	860	606	150	345	230	195	80	60	170	210	32	50	285	233	155	250	15	40	620	228	759	30	180	15	91

80MAP21.5 • 80MAP22.2

Specifications

Item		Description
Limits of use	Liquid Temp	0~40°C
	Applications	Wastewater and Sewage
	Submersion Depth	100feet (30m)
Type	Frequency	50Hz
	Motor	2P • Dry motor
	Insulation	Class F
	Protection	IP68
	Protector	Auto cut
	Bearing	Ball type
	M.seal	Double M.seal
	Impeller	Semi-open
Material	Upper Cover	Cast Iron
	Motor Frame	Cast Iron
	Main Shaft	SS403
	M.seal	Lower: Silicon/Silicon Upper: Carbon/Ceramic
	Casing	Cast Iron
	Impeller	Cast Iron
	Cable	VCT or H07RN-F or SJOW/SOW
Optional		Float switch

80MAP21.5

80MAP22.2

P Type
Semi-open Impeller

Performance Curves

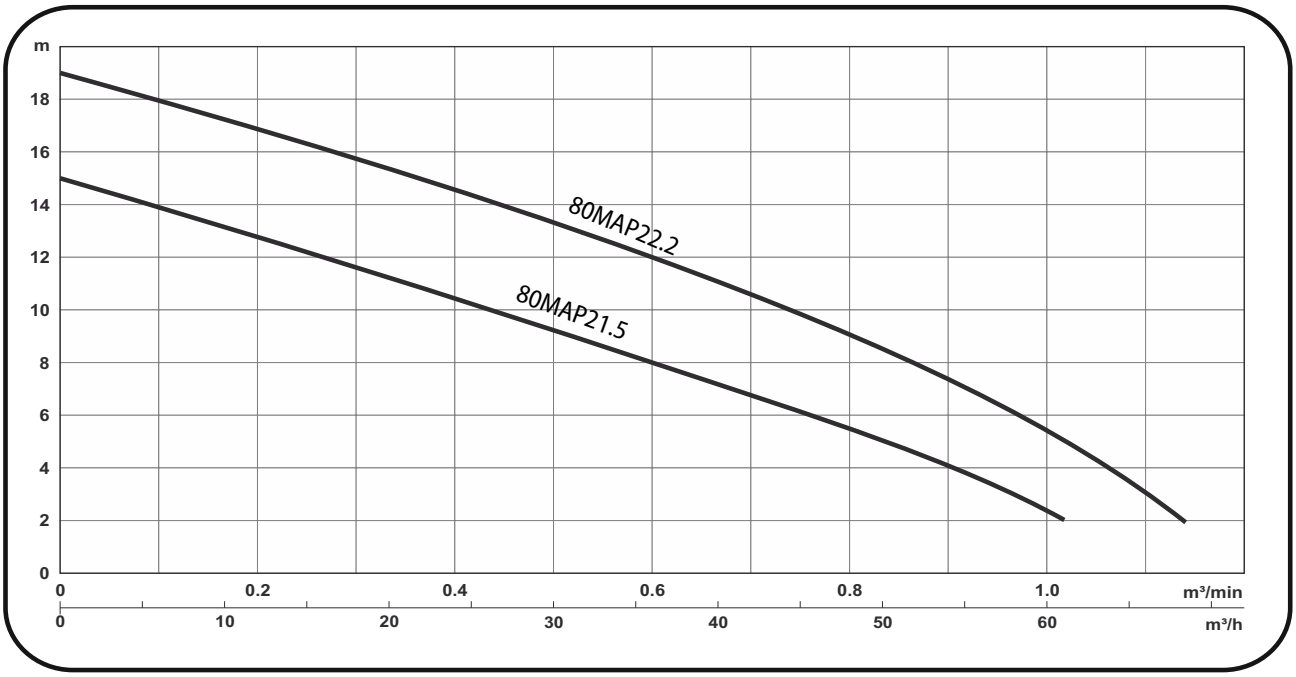

Model	Power HP (kW)	Discharge Inch (mm)	Q:m³/min	0.1	0.2	0.3	0.4	0.5	0.6	0.8	1
			Q:m³/h	6	12	18	24	30	36	48	60
80MAP21.5	2 (1.5)	3" (80)	H (m)	14.0	13.1	11.8	10.6	9.4	8	4.9	1.6
80MAP22.2	3 (2.2)	3" (80)		18.3	17.4	16.3	15.1	13.6	12	8.3	4.4

Model	Power HP (kW)	Discharge inch (mm)	Standard m - m³/h	Max m - m³/h	Solid Passage mm	Weight (W/O Cable) 1ø - kg	Weight (W/O Cable) 3ø - kg	Phase Voltage	1ø 220V	1ø 230V	1ø 240V	3ø 230V	3ø 380V	3ø 400V	3ø 415V
80MAP21.5	2 (1.5)	3" (80)	8-36	15-66	35	42	38	Full Load Ampere	10.4	10	9.8	6.1	3.6	3.5	3.4
80MAP22.2	3 (2.2)	3" (80)	12-36	19-72	35	45	40		15	14.6	14.4	8.6	5.1	5	4.8

Dimensions

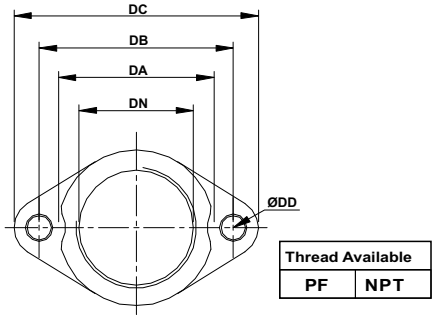

Thread Available	
PF	NPT

EB3-130

Nomenclature : EB 3 - 130

Elbow Set — Discharge (inch-DN) — Outlet PCD (mm-DB)

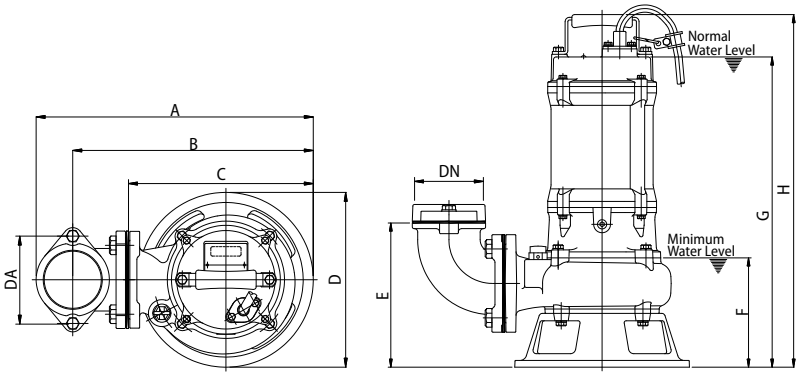

80MAP21.5 • 80MAP22.2

Elbow (flange) set	Application Model	Dimensions [mm]					Holes
		DN	DA	DB	DC	DD	
EB3-130	80MAP21.5	80	109	130	155	12	2
EB3-130	80MAP22.2	80	109	130	155	12	2

Model			Dimensions [mm]									
	DN	DA	A	B	C	D	E	F	G		H	
									1ø	3ø	1ø	3ø
80MAP21.5	80	130	413	358	275	260	215	160	513	462	576	525
80MAP22.2	80	130	413	358	275	260	215	160	545	462	608	525

GRS (Guid Rail System) Dimensions

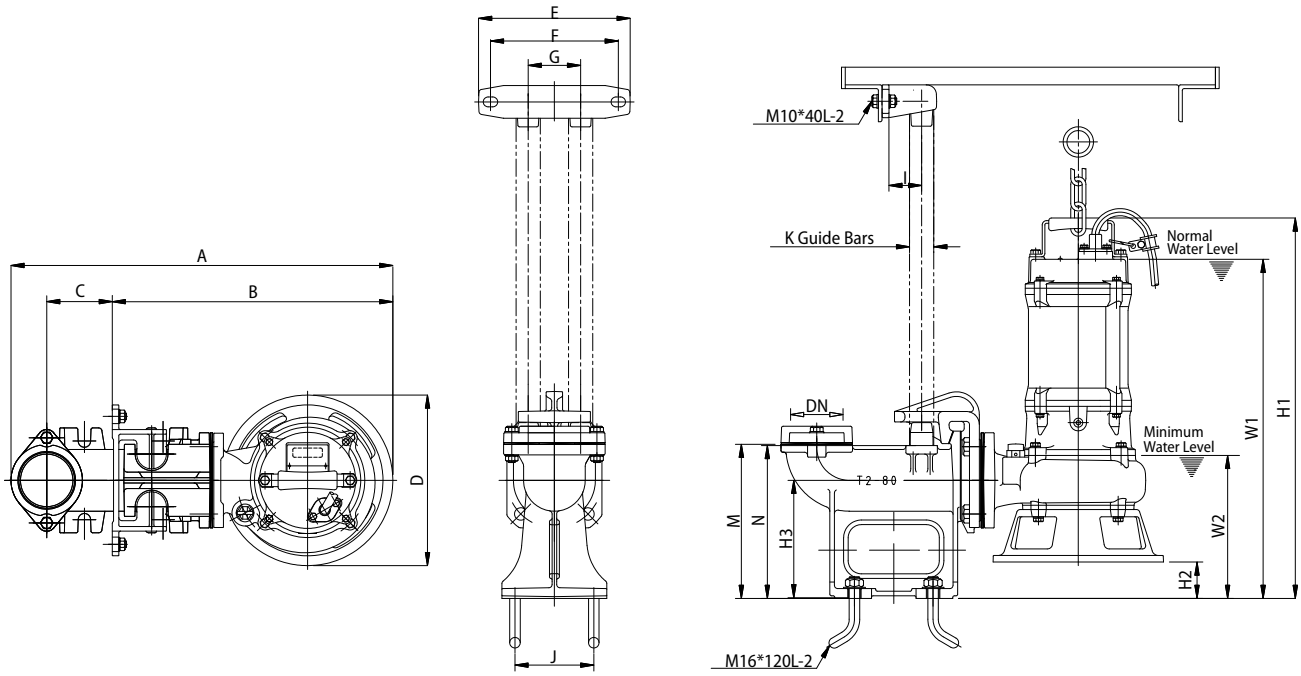

80MAP21.5 • 80MAP22.2 : GRS T2-80

Model	Dimensions [mm]																		
	DN	A	B	C	D	E	F	G	I	J	K	M	N	W1		H1		W2	H2	H3
														1ø	3ø	1ø	3ø			
80MAP21.5	80	580	430	100	260	230	195	80	50	120	32	235	233	573	522	636	585	220	60	180
80MAP22.2	80	580	430	100	260	230	195	80	50	120	32	235	233	605	522	668	585	220	60	180

80MAP23.7A

Specifications

Item		Description
Limits of use	Liquid Temp	0~40°C
	Applications	Wastewater and Sewage
	Submersion Depth	100feet (30m)
Type	Frequency	50Hz
	Motor	2P • Dry motor
	Insulation	Class F
	Protection	IP68
	Protector	Auto cut
	Bearing	Ball type
	M.seal	Double M.seal
	Impeller	Semi-open
Material	Upper Cover	Cast Iron
	Motor Frame	Cast Iron
	Main Shaft	SS403
	M.seal	Lower: Silicon/Silicon Upper: Carbon/Ceramic
	Casing	Cast Iron
	Casing Cover	Cast Iron
	Impeller	Cast Iron
	Cable	VCT or H07RN-F or SOW

80MAP23.7A

P Type
Semi-open
Impeller

Performance Curves

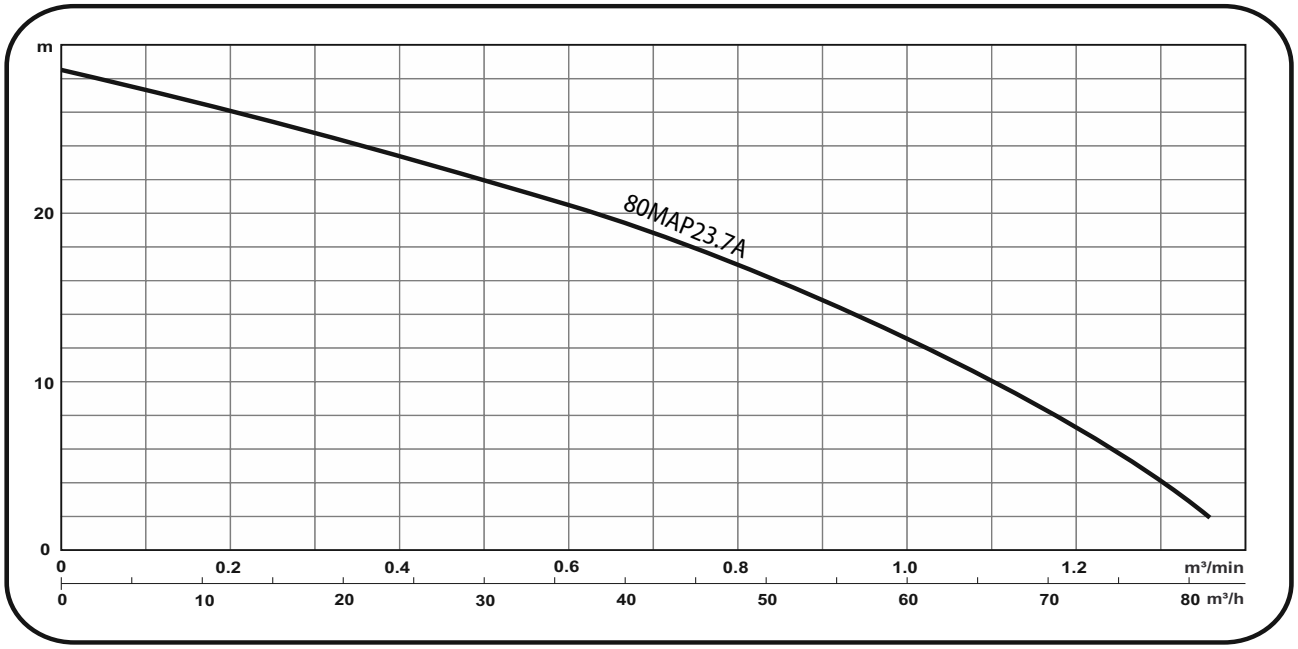

Model	Power HP (kW)	Discharge Inch (mm)	Q:m³/min	0.2	0.4	0.6	0.8	1	1.1	1.2	1.3
			Q:m³/h	12	24	36	48	60	66	72	78
80MAP23.7A	5 (3.7)	3" (80)	H (m)	26.0	23.4	20.5	16.9	12.5	10.0	7.3	4.1

Model	Power HP (kW)	Discharge inch (mm)	Standard	Max	Solid Passage mm	Weight (W/O Cable)		Phase	1ø	3ø	3ø	3ø	3ø	3ø	3ø
			m - m³/h	m - m³/h		1ø - kg	3ø - kg	Voltage	220V	220V	230V	380V	440V	460V	525V
80MAP23.7A	5 (3.7)	3" (80)	20.5-36	28.5-84	32	--	48	Full Load Ampere	--	14.2	14	8.4	7.1	7	6.2

Dimensions

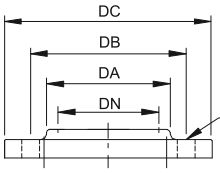

Thread Available	
PT (BSP.Tr.)	NPT

EF3-150

Nomenclature : EF_ 3_ - 150_
Flange Set / Discharge (inch-DN) / Pitch Circle Diameter (mm-DB)

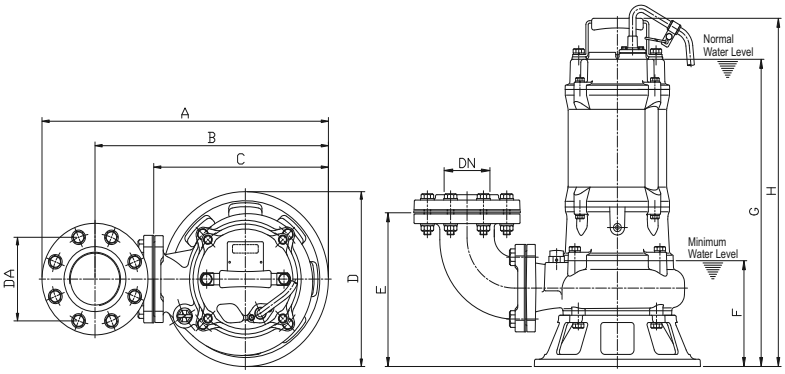

80MAP23.7A

Elbow (flange) set	Application Model	Dimensions [mm]					Holes
		DN	DA	DB	DC	DD	
EF3-150	80MAP23.7A	80	110	150	185	15	8

Model	Dimensions [mm]									
	DN	DA	A	B	C	D	E	F	G	H
80MAU23.7A	80	130	500	408	305	290	255	176	510	578

GRS (Guid Rail System) Dimensions

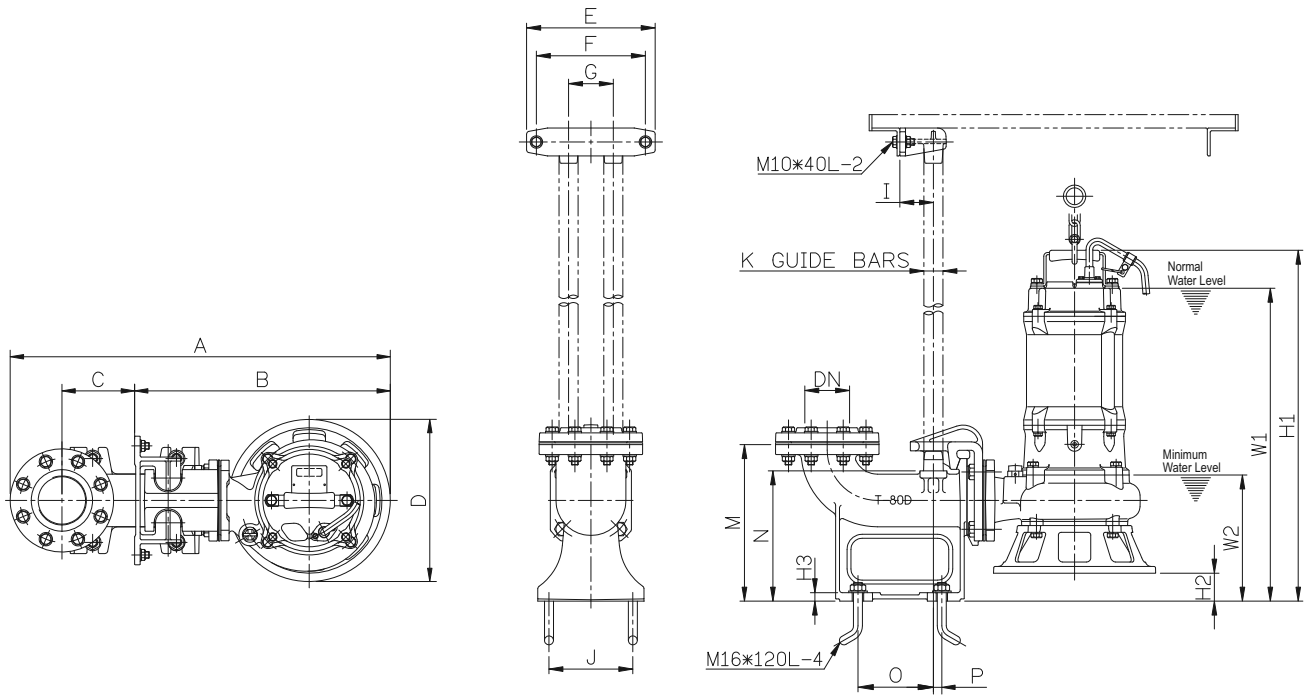

80MAP23.7A : GRS T-80D

Model	Dimensions [mm]																			
	DN	A	B	C	D	E	F	G	I	J	K	M	N	O	P	W1	W2	H1	H2	H3
80MAP23.7A	80	681	485	130	290	230	195	80	60	150	32	280	233	135	15	560	226	628	50	15

80MAP25.5 • 80MAP27.5 • 80MAP211

Specifications

Item		Description
Limits of use	Liquid Temp	0 ~ 40 °C
	Applications	Wastewater /Sewage/Industrial Wastewater
Type	Frequency	50Hz
	Motor	2P(3000rpm) • Dry motor
	Insulation	Class H
	Protection	IP68
	Protector	Auto cut(7.5~10HP).MTS &MS (15HP)
	Bearing	Ball type
	M.seal	Double M.seal
	Impeller	Open
Material	Outer Cover	Cast Iron
	Motor Frame	Cast Iron
	Main Shaft	SS403(7.5~10HP).SUS420J2(15HP)
	M.seal	Lower: Silicon/Silicon Upper: Carbon/Ceramic
	Casing	Cast Iron
	Impeller	Cast Iron
	Cable	VCT or H07RN-F or SJOW/SOW
Optional		--

80MAP25.5 • 80MAP27.5 • 80MAP211

Performance Curves

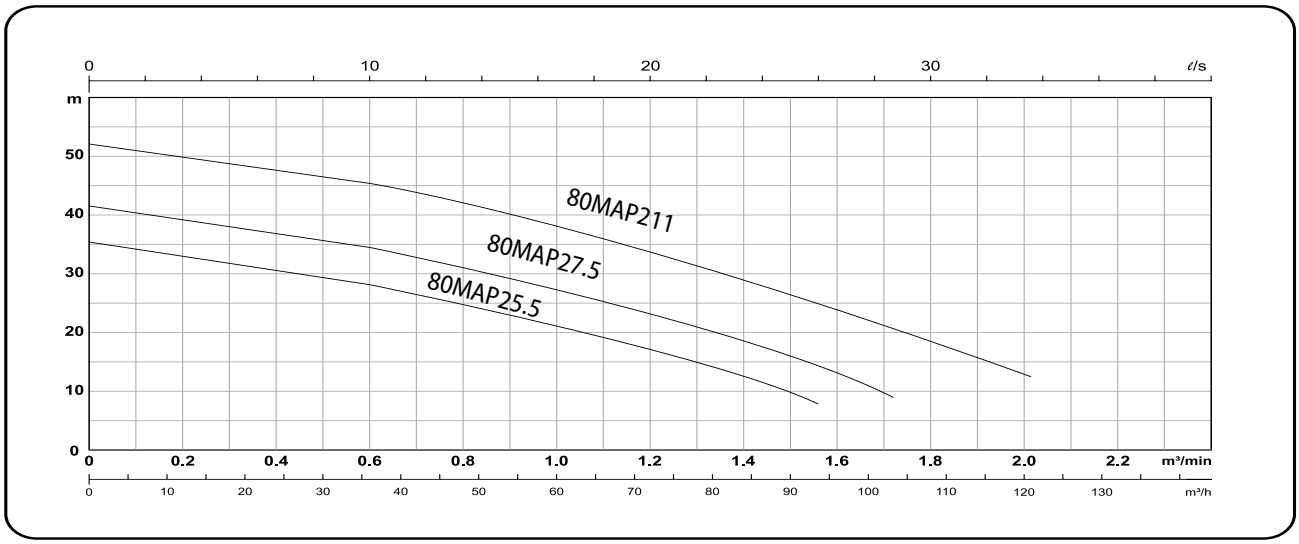

Model	Power HP (kW)	Discharge inch (mm)	Q:m³/min	0.2	0.4	0.6	0.8	1	1.2	1.6	2
			Q:m³/h	12	24	36	48	60	72	96	120
80MAP25.5	7.5 (5.5)	3" (80)	H (m)	33.0	30.6	28.2	24.9	21.1	17.2	--	--
80MAP27.5	10 (7.5)	3" (80)		39.2	36.9	34.5	31	27.3	23.2	13.1	--
80MAP211	15 (11)	3" (80)		49.9	47.7	45.4	42.1	38.2	33.7	23.9	12.8

Model	Power HP (kW)	Discharge inch (mm)	Standard	Max	Solid Passage mm	Weight (W/O Cable)		Phase	1ø	1ø	3ø	3ø	3ø	3ø	3ø
			m - m³/h	m - m³/h		1ø - kg	3ø - kg	Voltage	220V	230V	230V	380V	400V	415V	525V
80 MAP 25.5	7.5 (5.5)	3" (80)	28-36	35-96	30.0	--	75	Full Load Ampere	--	--	20.2	11.7	11.3	11.2	8.8
80 MAP 27.5	10 (7.5)	3" (80)	34.5-36	41.5-105	30.0	--	81.0		--	--	26.0	15.3	14.5	14.4	11.4
80 MAP 211	15(11)	3" (80)	45-36	52.5-123	30.0	--	91.0		--	--	39.0	22.2	21.6	21.6	17.1

Dimensions

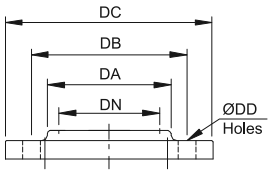

Thread Available	
PT (BSP.Tr.)	NPT

EF3-150

Nomenclature : EF 3 - 150
Flange Set / Discharge (inch-DN) / Pitch Circle Diameter (mm-DB)

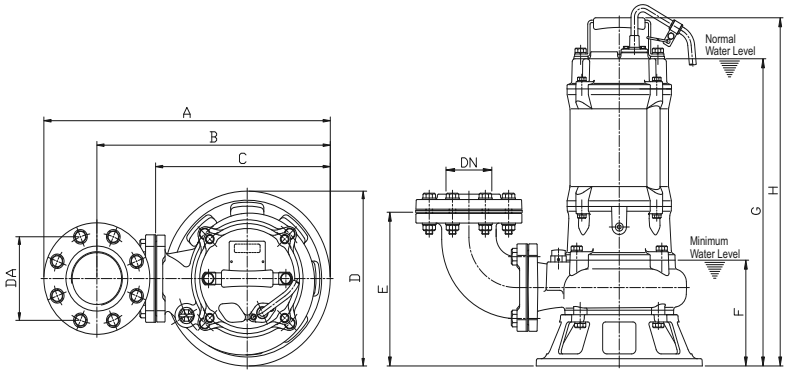

80MAP25.5 • 80MAP27.5 • 80MAP211

Elbow (flange) set	Application Model	Dimensions [mm]				Holes
		DN	DB	DC	DD	
EB3-150A	80MAP25.5	80	150	185	15	8
EB3-150A	80MAP27.5	80	150	185	15	8
EB3-150A	80MAP211	80	150	185	15	8

Model	Dimensions [mm]								
	DN	A	B	C	D	E	F	G	H
80MAP25.5	80	565	471	373	345	270	198	590	689
80MAP27.5	80	565	471	373	345	270	198	590	689
80MAP211	80	565	471	373	345	270	198	630	729

GRS (Guid Rail System) Dimensions

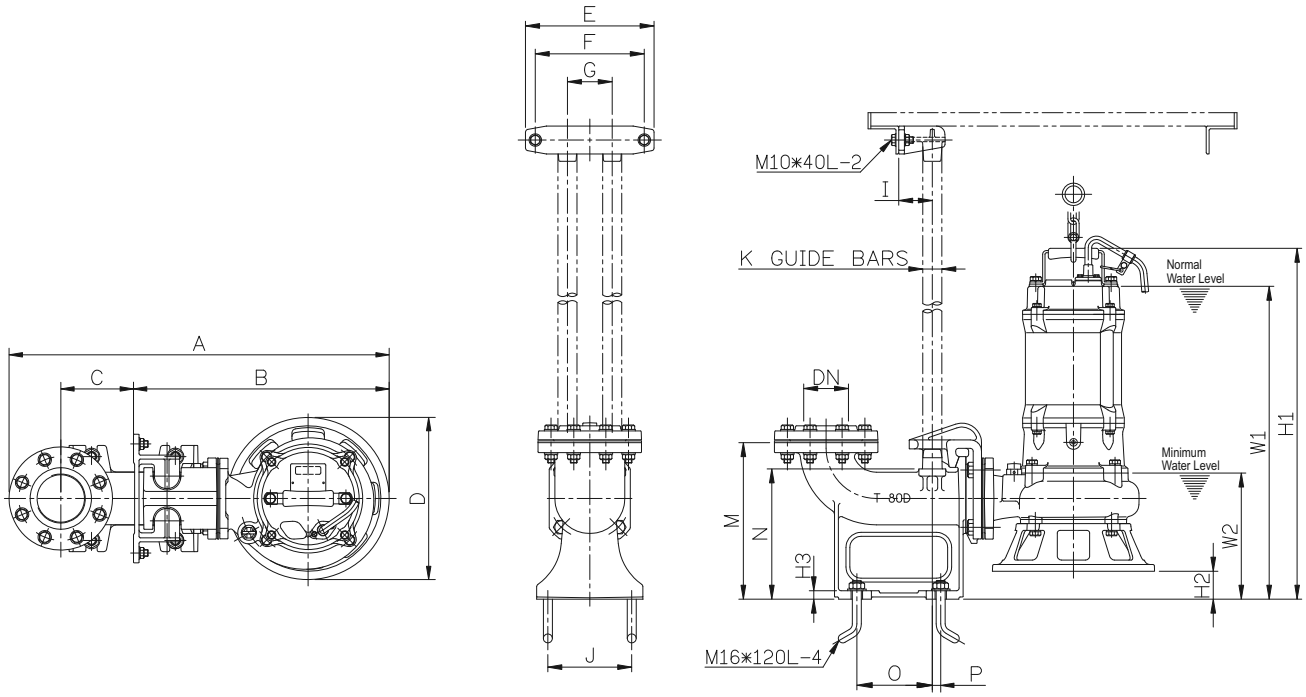

80MAP25.5 • 80MAP27.5 • 80MAP211 : GRS T-80BH

Model	Dimensions [mm]																			
	DN	A	B	C	D	E	F	G	I	J	K	M	N	O	P	W1	W2	H1	H2	H3
80MAP25.5	80	828	606	130	345	230	195	80	60	150	32	280	233	135	15	620	228	719	30	15
80MAP27.5	80	828	606	130	345	230	195	80	60	150	32	280	233	135	15	620	228	719	30	15
80MAP211	80	828	606	130	345	230	195	80	60	150	32	280	233	135	15	660	228	759	30	15

100MAP25.5 • 100MAP27.5 • 100MAP211

Specifications

Item		Description
Limits of use	Liquid Temp	0 ~ 40 °C
	Applications	Wastewater /Sewage/Industrial Wastewater
Type	Frequency	50Hz
	Motor	2P(3000rpm) • Dry motor
	Insulation	Class H
	Protection	IP68
	Protector	Auto cut(7.5~10HP).MTS &MS (15HP)
	Bearing	Ball type
	M.seal	Double M.seal
	Impeller	Open
Material	Outer Cover	Cast Iron
	Motor Frame	Cast Iron
	Main Shaft	SS403(7.5~10HP).SUS420J2(15HP)
	M.seal	Lower: Silicon/Silicon Upper: Carbon/Ceramic
	Casing	Cast Iron
	Impeller	Cast Iron
	Cable	VCT or H07RN-F or SJOW/SOW
Optional		--

100MAP25.5 • 100MAP27.5 • 100MAP211

Performance Curves

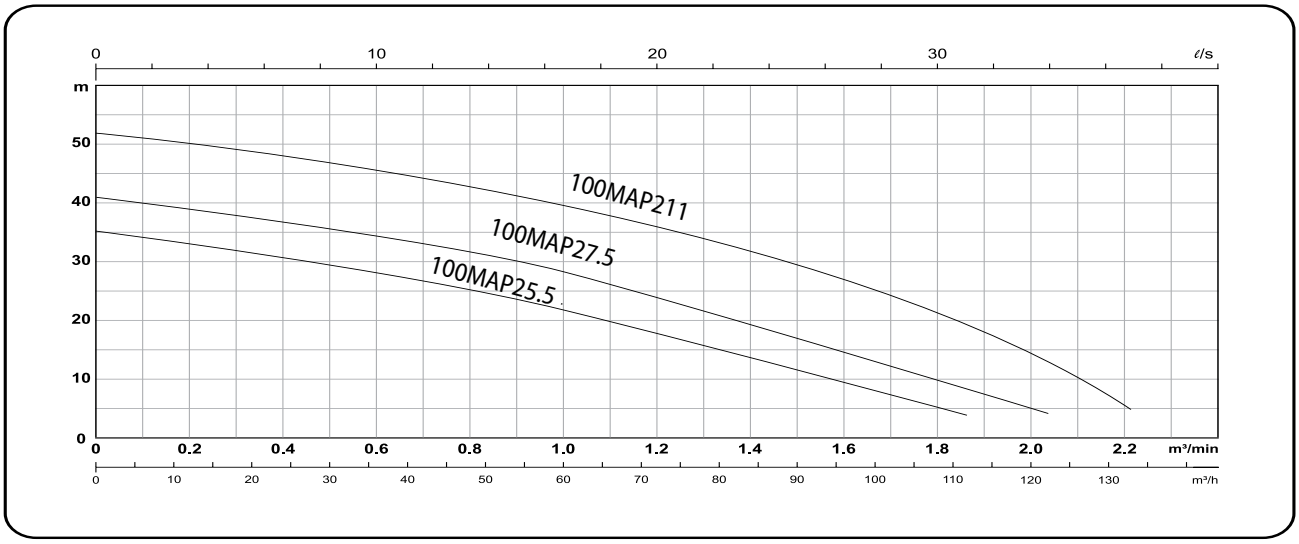

Model	Power HP (kW)	Discharge Inch (mm)	Q:m³/min	0.2	0.4	0.6	0.8	1	1.2	1.6	2
			Q:m³/h	12	24	36	48	60	72	96	120
100MAP25.5	7.5 (5.5)	4" (100)	H (m)	33.1	30.7	28.2	25.2	21.8	17.8	9.5	--
100MAP27.5	10 (7.5)	4" (100)		39.0	36.8	34.4	31.7	28.4	23.9	14.6	5.0
100MAP211	15 (11)	4" (100)		50.1	48.1	45.6	42.8	39.6	36.0	27.0	14.4

Model	Power HP (kW)	Discharge inch (mm)	Standard	Max	Solid Passage mm	Weight (W/O Cable)		Phase	1ø	1ø	3ø	3ø	3ø	3ø	3ø
			m - m³/h	m - m³/h		1ø - kg	3ø - kg	Voltage	220V	230V	230V	380V	400V	415V	525V
100 MAP 25.5	7.5 (5.5)	4" (100)	21.5-60	35-114	30.0	--	75	Full Load Ampere	--	--	20.2	11.7	11.3	11.2	8.8
100 MAP 27.5	10 (7.5)	4" (100)	28-60	41.5-123	30.0	--	81.0		--	--	26.0	15.3	14.5	14.4	11.4
100 MAP 211	15(11)	4" (100)	39.5-60	52.5-138	30.0	--	91.0		--	--	39.0	22.2	21.6	21.6	17.1

Dimensions

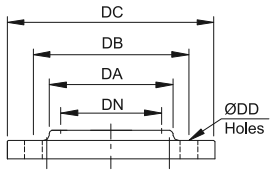

Thread Available	
PT (BSP.Tr.)	NPT

EF3-150

Nomenclature : EF 3 - 150
Flange Set / Discharge (inch-DN) / Pitch Circle Diameter (mm-DB)

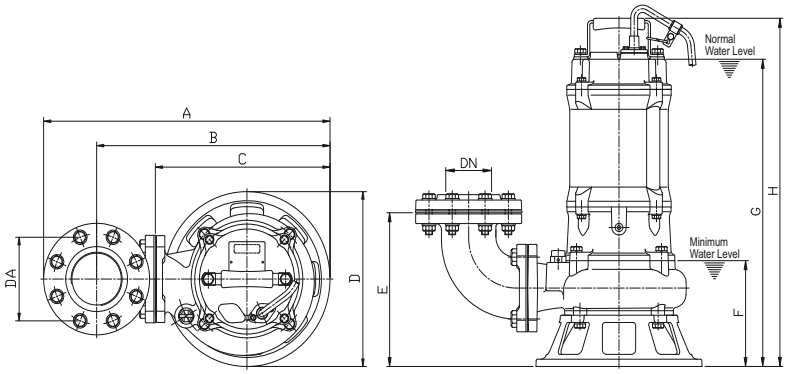

100MAP25.5 • 100MAP27.5 • 80MAP211

Elbow (flange) set	Application Model	Dimensions [mm]				Holes
		DN	DB	DC	DD	
EB4-175(145)	100MAP25.5	100	175	210	15	8
EB4-175(145)	100MAP27.5	100	175	210	15	8
EB4-175(145)	100MAP211	100	175	210	15	8

Model	Dimensions [mm]								
	DN	A	B	C	D	E	F	G	H
100MAP25.5	100	596	486	373	345	282	198	590	689
100MAP27.5	100	596	486	373	345	282	198	590	689
100MAP211	100	596	486	373	345	282	198	630	729

GRS (Guid Rail System) Dimensions

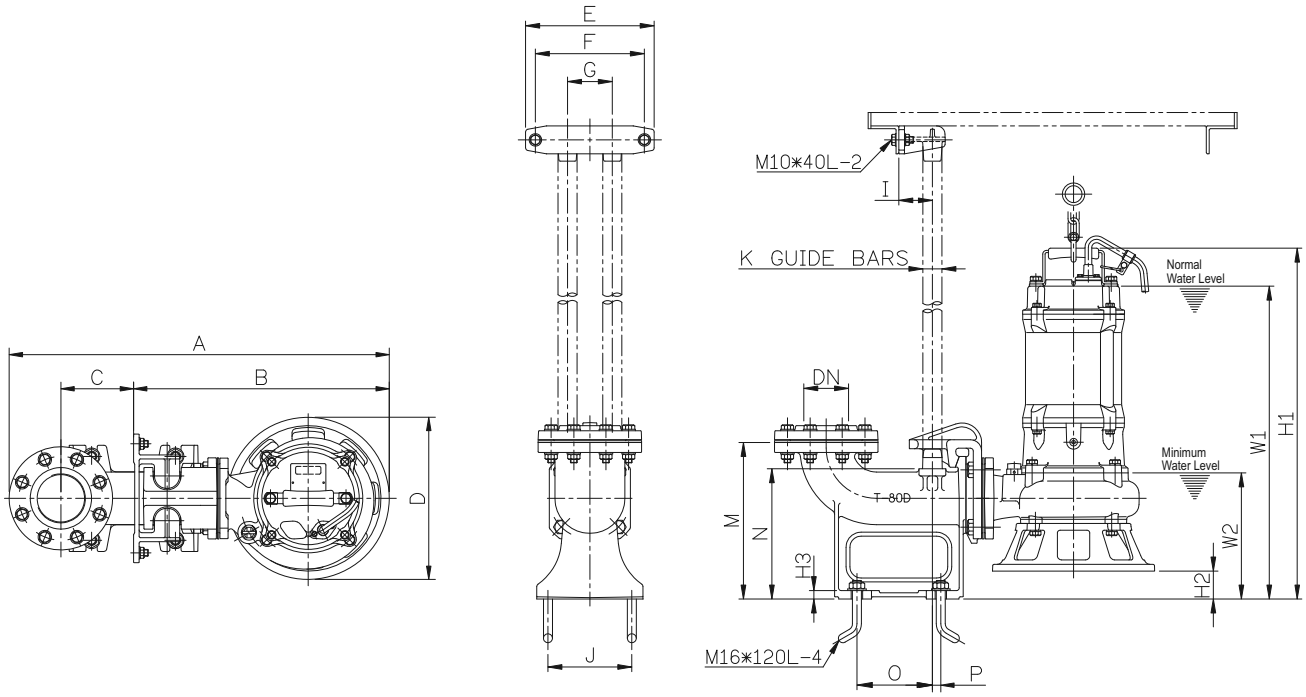

100MAP25.5 • 100MAP27.5 • 80MAP211: GRs T-80DH

Model	Dimensions [mm]																			
	DN	A	B	C	D	E	F	G	I	J	K	M	N	O	P	W1	W2	H1	H2	H3
100MAP25.5	100	860	606	150	345	230	195	80	60	170	32	285	233	155	15	620	228	719	30	15
100MAP27.5	100	860	606	150	345	230	195	80	60	170	32	285	233	155	15	620	228	719	30	15
100MAP211	100	860	606	150	345	230	195	80	60	170	32	285	233	155	15	660	228	759	30	15

80MAP41.5 • 80MAP42.2
80MAP43.7 • 100MAP43.7

Specifications

Item		Description
Limits of use	Liquid Temp	0~40℃
	Applications	Wastewater and Sewage
	Submersion Depth	100feet (30m)
Type	Frequency	50Hz
	Motor	4P • Dry motor
	Insulation	Class F
	Protection	IP68
	Protector	Auto cut
	Bearing	Ball type
	M.seal	Double M.seal
	Impeller	Semi-open
Material	Upper Cover	Cast Iron
	Motor Frame	Cast Iron
	Main Shaft	SS403
	M.seal	Lower: Silicon/Silicon Upper: Carbon/Ceramic
	Casing	Cast Iron
	Impeller	Cast Iron
	Cable	VCT or H07RN-F or SJOW/SOW
Optional		-

80MAP41.5

80MAP42.2

P Type
Semi-open Impeller

Performance Curves

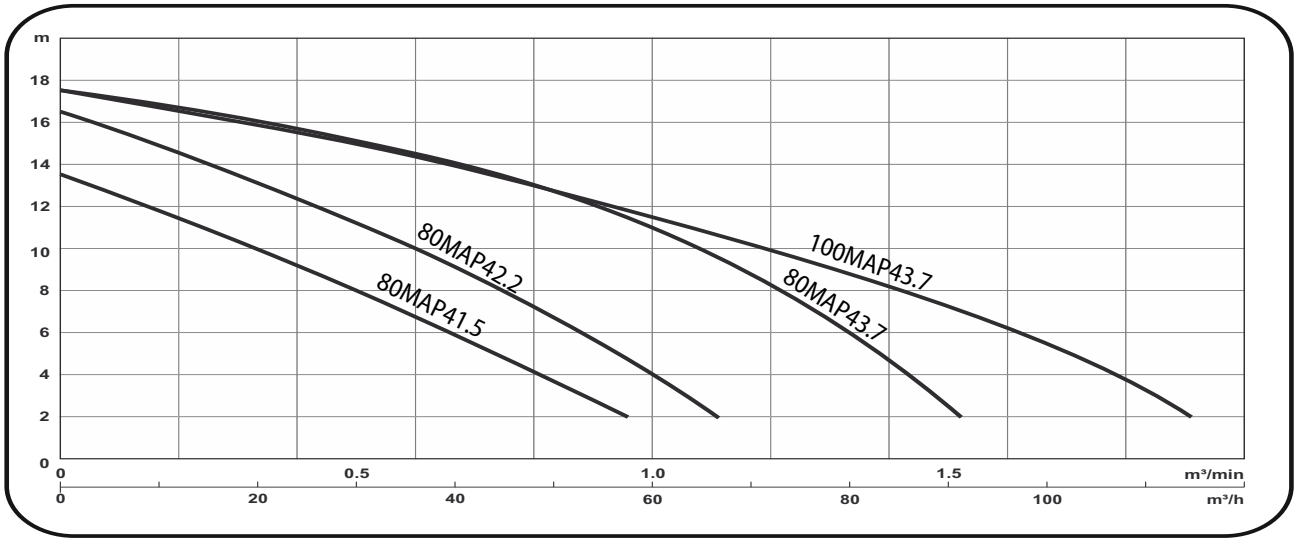

Model	Power HP (kW)	Discharge Inch (mm)	Q:m³/min	0.2	0.4	0.6	0.8	1	1.2	1.4	1.8
			Q:m³/h	12	24	36	48	60	72	84	108
80MAP41.5	2 (1.5)	3" (80)	H (m)	11.5	9.3	6.7	4.1	1.4	--	--	--
80MAP42.2	3 (2.2)	3" (80)		14.6	12.4	10	7	3.8	--	--	--
80MAP43.7	5 (3.7)	3" (80)		16.9	15.9	14.5	12.5	10	7.2	4	--
100MAP43.7	5 (3.7)	4" (100)		16.9	16	14.8	13.3	11.5	9.4	7.2	2.6

Model	Power HP (kW)	Discharge inch (mm)	Standard m - m³/h	Max m - m³/h	Solid Passage mm	Weight (W/O Cable) 1ø - kg	3ø - kg	Phase Voltage	1ø 220V	1ø 230V	1ø 240V	3ø 230V	3ø 380V	3ø 400V	3ø 415V
80MAP41.5	2 (1.5)	3" (80)	8-30	13.5-66	50	51	52	Full Load Ampere	10.4	10.2	10	6.6	3.9	3.8	3.6
80MAP42.2	3 (2.2)	3" (80)	10-36	16.5-72	50	--	70		--	--	--	9.2	5.5	5.4	5.1
80MAP43.7	5 (3.7)	3" (80)	14.5-36	17.5-96	50	--	79		--	--	--	15.2	8.8	8.8	8.4
100MAP43.7	5 (3.7)	4" (100)	11.5-60	17.5-120	50	--	82		--	--	--	15.2	8.8	8.8	8.4

Dimensions

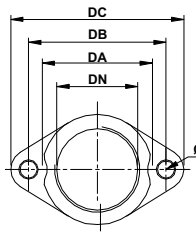

Nomenclature :

Eb	3	-	175	(145)
Elbow Set	Discharge (inch-DN)		Outlet PCD (mm-DB)	Inlet PCD (mm)

Thread Available	
PF	NPT

EB3-130

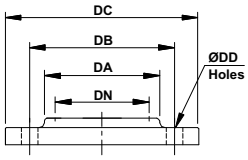

Thread Available	
PT (BSP.Tr.)	NPT

EB3-150 • EB3-175(145)

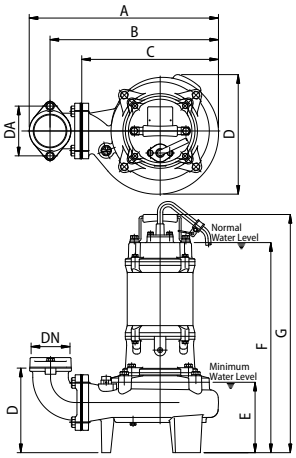

80MAP41.5

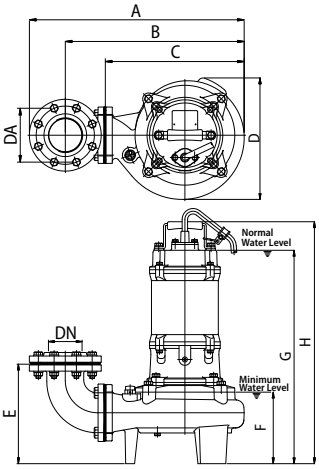

80MAP42.2 • 80MAP43.7 • 100MAP43.7

Elbow (flange) set	Application Model	Dimensions [mm]					Holes
		DN	DA	DB	DC	DD	
EB3-130	80MAP41.5	80	109	130	155	12	2
EB3-150	80MAP42.2	80	110	150	185	15	8
EB3-150	80MAP43.7	80	110	150	185	15	8
EB3-175(145)	100MAP43.7	100	136	175	210	15	8

Model			Dimensions [mm]									
	DN	DA	A	B	C	D	E	F	G		H	
									1ø	3ø	1ø	3ø
80MAP41.5	80	130	472	418	334	290	221	182	582	504	645	567
80MAP42.2	80	150	553	461	437	313	256	184	--	550	--	623
80MAP43.7	80	150	553	461	437	313	256	184	--	570	--	643
100MAP43.7	100	175	571	446	437	313	256	184	--	570	--	643

GRS (Guid Rail System) Dimensions

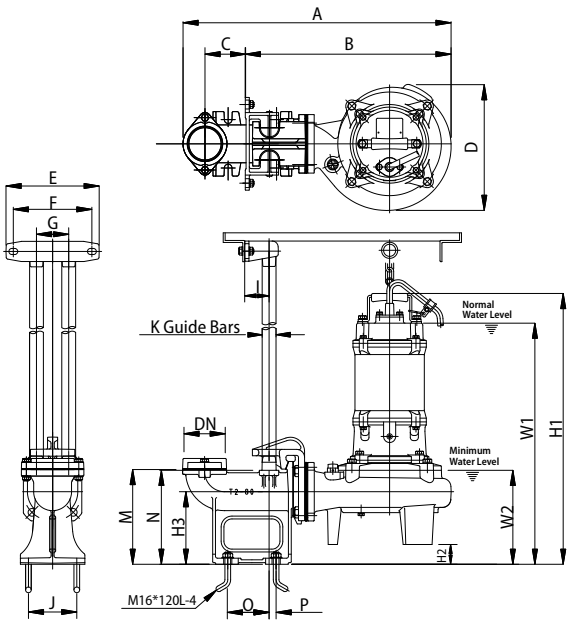

80MAP41.5 : GRS T2-80

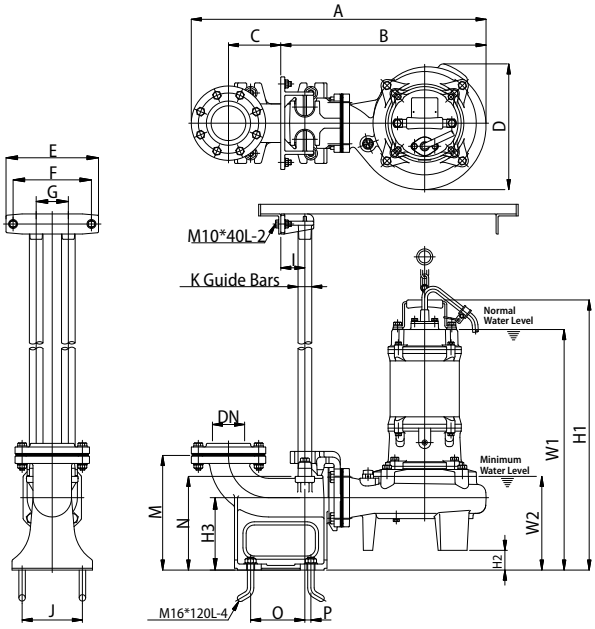

80MAP42.2 • 80MAP43.7 : GRS T80D
100 MAP43.7 : GRS T100(80)

Model	Dimensions [mm]																				
	DN	A	B	C	D	E	F	G	I	J	K	M	N	O	P	W1		W2	H1		H2	H3
																1ø	3ø		1ø	3ø		
80MAP41.5	80	640	480	100	290	230	195	80	60	120	32	235	233	103	18	631	553	231	694	616	49	180
80MAP42.2	80	734	511	130	313	230	195	80	60	150	32	285	233	135	15	--	599	233	--	672	49	180
80MAP43.7	80	734	511	130	313	230	195	80	60	150	32	285	233	135	15	--	619	233	--	692	49	180
100MAP43.7	100	781	511	166	313	230	195	80	60	170	32	290	238	155	15	--	619	233	--	692	49	185

80(100)MAE42.2 • 80(100)MAE43.7

Specifications

Item		Description
Limits of use	Liquid Temp	0 ~ 40 °C
	Applications	Wastewater /Sewage/Industrial Wastewater
Type	Frequency	50Hz
	Motor	4P(1500rpm) • Dry motor
	Insulation	Class F
	Protection	IP68
	Protector	Auto cut
	Bearing	Ball type
	M.seal	Double M.seal
	Impeller	Enclosed-Channel
Material	Outer Cover	Cast Iron
	Motor Frame	Cast Iron
	Main Shaft	SS403
	M.seal	Lower: Silicon/Silicon Upper: Carbon/Ceramic
	Casing	Cast Iron
	Impeller	Cast Iron
	Cable	VCT or H07RN-F or SJOW/SOW
Optional		--

Performance Curves

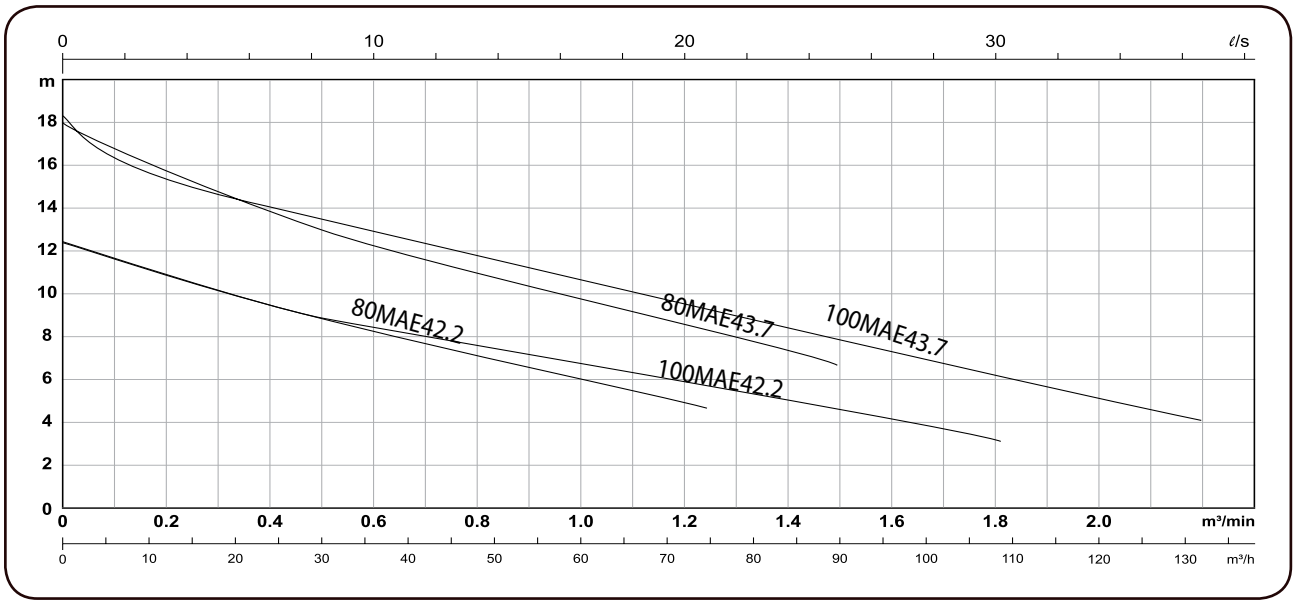

Model	Power HP(KW)	Discharge (mm)	Q:m³/min	0.2	0.4	0.6	0.8	1	1.4	1.8
			Q:m³/h	12	24	36	48	60	84	108
80 MAE42.2	3(2.2)	3"(80)	H (m)	10.9	9.5	8.2	7.1	6.0	--	--
100MAE42.2	5(3.7)	4" (100)		10.9	9.5	8.4	7.6	6.7	5.0	3.2
80MAE43.7	3(2.2)	3"(80)		15.7	13.9	12.2	11.0	9.8	7.4	--
100MAE43.7	5(3.7)	4" (100)		15.4	14.1	12.9	11.8	10.6	8.4	6.2

Model	Power HP(KW)	Discharge (mm)	Standard	Max	Solid passage mm	Weight(W/O cable)		Phase	1ø	1ø	3ø	3ø	3ø	3ø	3ø
			m-m³/h	m-m³/h		1ø kg	3ø kg	voltage	220V	230V	230V	380V	400V	415V	525V
80 MAE 42.2	3(2.2)	3"(80)	7-48	12.5-81	76.0		60	full load Ampere			9.2	5.5	5.4	5.1	4.1
100 MAE 42.2	3(2.2)	4" (100)	6.5-60	12.5-114	76.0	--	60		--	--	9.2	5.5	5.4	5.1	4.1
80 MAE 43.7	5(3.7)	3"(80)	11-48	18.5-96	76.0		71				15.2	8.8	8.8	8.4	6.7
100 MAE 43.7	5(3.7)	4" (100)	10.5-60	18.5-138	76.0	--	71.0		--	--	15.2	8.8	8.8	8.4	6.7

Dimensions

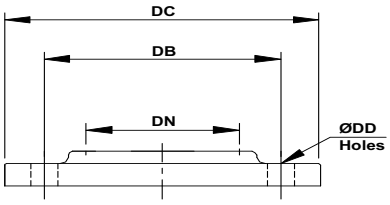

EB3-150A & EB4-175A

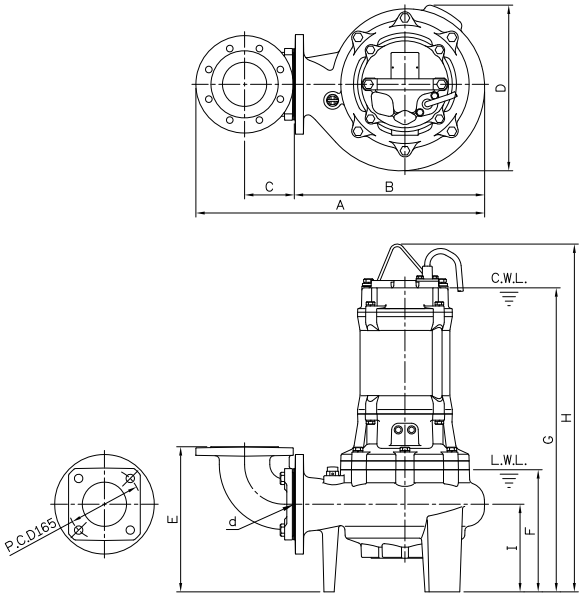

100MAE-45.5, 100 MAE 47.5

Elbow (Flange)set	Application model	Dimensions [mm]				Holes
		DN	DB	DC	DD	
EB3-150A	80MAE 42.2	80	150	185	15	8
EB4-175(145)	100MAE 42.2	100	175	210	15	8
EB3-150A	80MAE 43.7	80	150	185	15	8
EB4-175(145)	100MAE 43.7	100	175	210	15	8

Typ	Dimensions [mm]									
	d	A	B	C	D	E	F	G	H	I
80MAE 45.5	80	521	328	98	287	294	241	586	660	174
100 MAE42.2	80	521	328	113	287	305	241	586	660	174
80MAE 45.5	80	539	346	98	304	294	241	626	700	174
100 MAE42.2	80	569	346	113	304	305	241	626	700	174

GRS (Guid Rail System) Dimensions

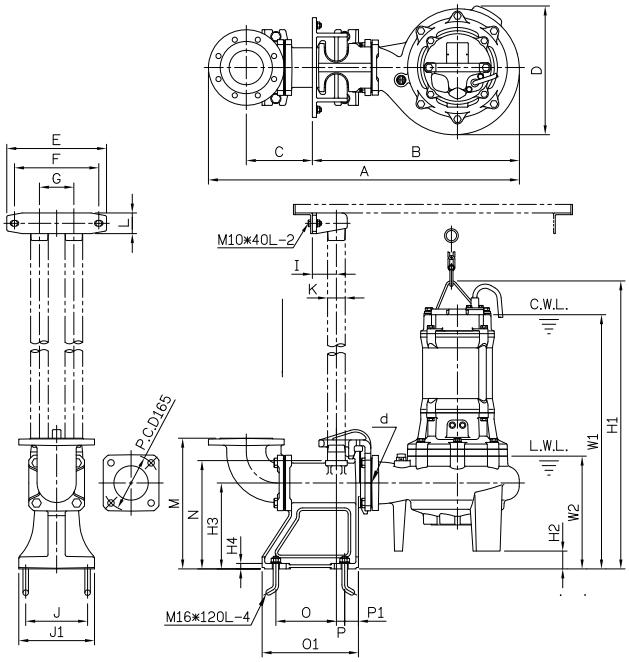

Model	Dimensions [mm]																							
	DN	A	B	C	D	E	F	G	I	J1	J	K	L	M	N	O	O1	P	P1	W1	W2	H1	H2	H3	H4
80MAE42.2	80	703	481	130	287	230	195	80	60	150	190	32	50	280	233	135	230	15	40	593	248	666	7	180	15
100MAE42.2	100	735	481	150	287	230	195	80	60	170	210	32	50	285	233	155	230	15	40	593	248	666	7	180	15
80MAE43.7	80	721	499	130	304	230	195	80	60	150	190	32	50	280	233	135	230	15	40	633	248	706	7	180	15
100MAE43.7	100	753	499	150	304	230	195	80	60	170	210	32	50	285	233	155	250	15	40	633	248	706	7	180	15

100(150)MAE-45.5 • 100(150)MAE 47.5

Specifications

Item		Description
Limits of use	Liquid Temp	0 ~ 40 °C
	Applications	Wastewater /Sewage/Industrial
Type	Frequency	50Hz
	Motor	4P(1500rpm) • Dry motor
	Insulation	Class H
	Protection	IP68
	Protector	Auto cut
	Bearing	Ball type
	M.seal	Double M.seal
	Impeller	Enclosed-Channel
Material	Outer Cover	Cast Iron
	Motor Frame	Cast Iron
	Main Shaft	SS420J2
	M.seal	Lower: Silicon/Silicon Upper: Carbon/Ceramic
	Casing	Cast Iron
	Impeller	Cast Iron
	Cable	VCT or H07RN-F or SJOW/SOW
Optional		--

100MAE-45.5

100MAE-47.5

E Type
Impeller

Performance Curves

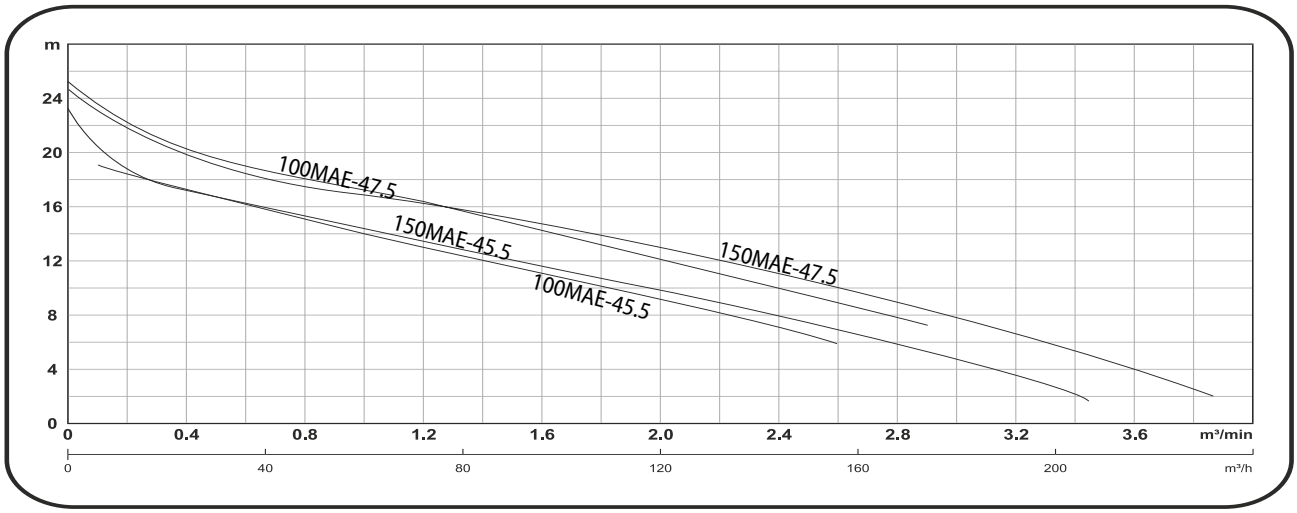

Model	Power HP (kW)	Discharge Inch (mm)	Q:m³/min	0.4	0.8	1.2	1.6	2	2.4	2.8	3.2
			Q:m³/h	24	48	72	96	120	144	168	192
100 MAE45.5	7.5 (5.5)	4" (100)	H (m)	18.0	15.8	13.8	11.7	9.6	7.4	--	--
100 MAE47.5	10 (7.5)	4" (100)		20.3	18.1	16.4	14.2	12.2	10.0	7.7	--
150 MAE45.5	7.5 (5.5)	6" (150)		18.0	15.8	14.0	12.3	10.4	8.4	6.2	3.8
150 MAE47.5	10 (7.5)	6" (150)		19.8	17.5	16.2	14.8	13.0	11.1	9.0	6.6

Model	Power HP (kW)	Discharge inch (mm)	Standard	Max	Solid Passage mm	Weight (W/O Cable)		Phase	1ø	1ø	3ø	3ø	3ø	3ø	3ø
			m - m³/h	m - m³/h		1ø - kg	3ø - kg	Voltage	220V	230V	230V	380V	400V	415V	525V
100 MAE 45.5	7.5 (5.5)	4" (100)	14-60	23.5-156	76.0	--	110	Full Load Ampere	--	--	22.2	12.6	12.3	12.3	9.8
100 MAE 47.5	10 (7.5)	4" (100)	17-60	25.5-174	76.0	--	120		--	--	28.8	16.3	16.0	16.0	12.6
150 MAE 45.5	7.5 (5.5)	6" (150)	12-90	23.5-210	76.0	--	110		--	--	22.2	12.6	12.3	12.3	9.8
150 MAE 47.5	10 (7.5)	6" (150)	15-90	25.5-234	76.0	--	120		--	--	28.8	16.3	16.0	16.0	12.6

Dimensions

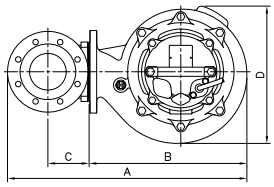

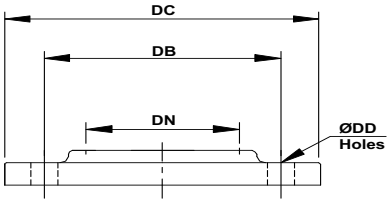

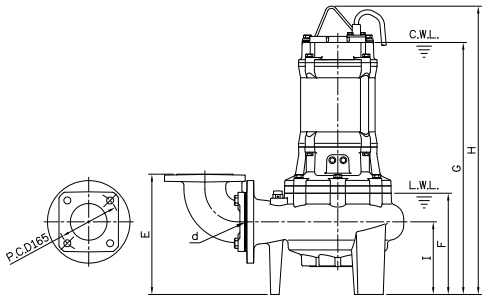

100MAE-45.5 • 100 MAE 47.5

Elbow (flange) set	Application Model	Dimensions [mm]				Holes
		DN	DB	DC	DD	
EB4-175A	100MAE 45.5	100	175	210	15	8
EB4-175A	100 MAE47.5	100	175	210	15	8
EB6-240	150MAE 45.5	150	240	280	23	8
EB6-240	150 MAE47.5	150	240	280	23	8

Model	Dimensions [mm]									
	d	A	B	C	D	E	F	G	H	I
100MAE 45.5	100	653	430	113	374	328	276	687	786	198
100 MAE47.5	100	653	430	113	374	328	276	727	826	198
150MAE 45.5	100	713	430	143	374	358	276	687	786	198
150 MAE47.5	100	713	430	143	374	358	276	727	826	198

GRS (Guid Rail System) Dimensions

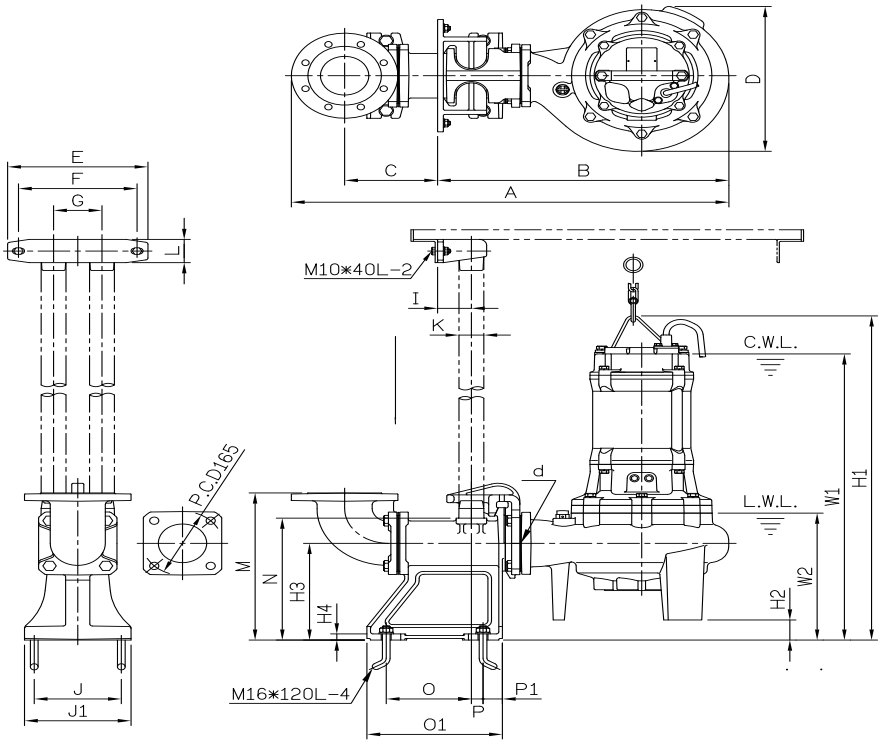

100(150)MAE-45.5• 100(150) MAE-47.5: GRs T150(100)B

Model	Dimensions [mm]																							
	DN	A	B	C	D	E	F	G	I	J	J1	K	L	M	N	O	O1	P	P1	W1	W2	H1	H2	H3	H4
100 MAE 45.5	100	907	605	192	374	290	245	100	70	180	220	2"	60	380	315	176	280	24	40	739	328	838	52	250	16
100 MAE 47.5	100	907	605	192	374	290	245	100	70	180	220	2"	61	380	315	176	280	24	40	779	328	878	52	250	16
150 MAE 45.5	100	967	605	192	374	290	245	100	70	180	220	2"	60	410	315	176	280	24	40	739	328	838	52	250	16
150 MAE 47.5	100	967	605	192	374	290	245	100	70	180	220	2"	60	410	315	176	280	24	40	779	328	879	52	250	16

100(150)MAE-411 • 100(150)MAE 415 • 100(150)MAE 422

Specifications

Item		Description
Limits of use	Liquid Temp	0 ~ 40 °C
	Applications	Wastewater /Sewage/Industrial Wastewater
Type	Frequency	50Hz
	Motor	4P(1500rpm) • Dry motor
	Insulation	Class H
	Protection	IP68
	Protector	MTS & MS
	Bearing	Ball type
	M.seal	Double M.seal
	Impeller	Enclosed-Channel
Material	Outer Cover	Cast Iron
	Motor Frame	Cast Iron
	Main Shaft	SS420J2
	M.seal	Lower: Silicon/Silicon Upper: Carbon/Ceramic
	Casing	Cast Iron
	Impeller	Cast Iron
	Cable	VCT or H07RN-F or SJOW/SOW
Optional		--

Performance Curves

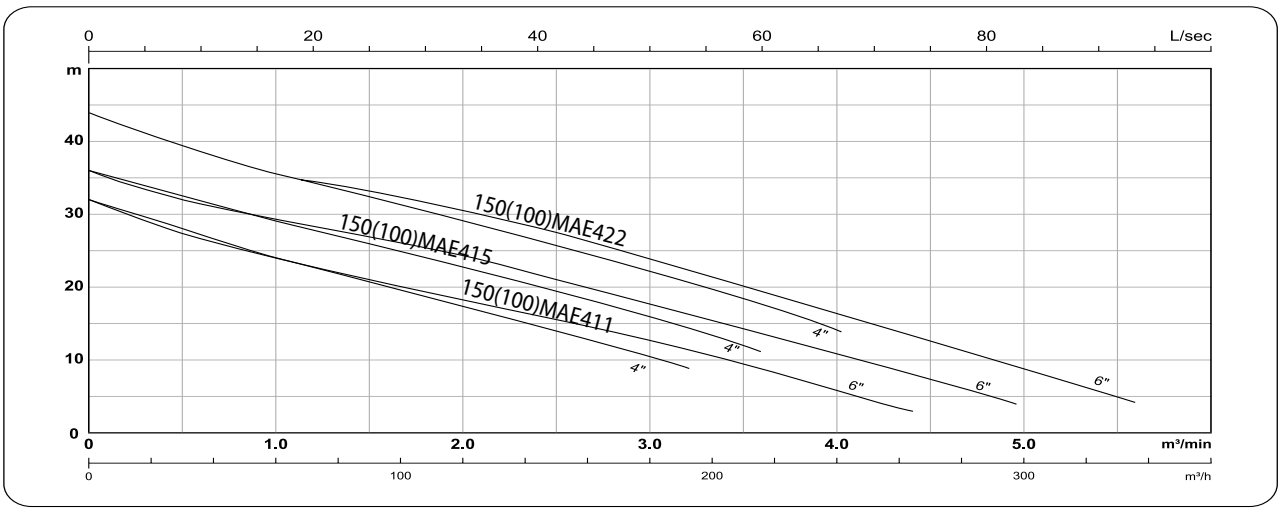

Model	Power HP(KW)	Discharge (mm)	Q: m³/min	0.5	1	1.5	2	2.5	3	3.5	4.5
			Q: m³/h	30	60	90	120	150	180	210	270
100(150)MAE 411	15(11)	4" (100)	H(m)	28.0	24.0	20.8	17.4	14.0	10.4	--	--
		6" (150)		27.4	24.0	21.0	18.4	15.4	12.8	9.3	--
100(150)MAE 415	20(15)	4" (100)		32.6	29.3	26.0	22.9	19.5	16.0	12.0	--
		6" (150)		32.0	29.0	27.0	24.5	21.0	17.8	14.3	7.0
100(150)MAE 422	30(22)	4" (100)		39.4	35.6	32.4	29.2	25.8	22.2	18.4	--
		6" (150)		39.4	35.6	33.2	30.6	27.5	24.0	20.2	12.6

Model	Power HP(KW)	Discharge (mm)	Standard	Max	Solid passage mm	Weight(W/O cable)		phase	1ø	1ø	3ø	3ø	3ø	3ø	3ø
			m-m³/h	m-m³/h		1ø kg	3ø kg	voltage	220V	230V	230V	380V	400V	415V	525V
100(150)MAE 411	15(11)	4" (100)	24-60	32-198	76.0	--	164	full load Ampere	--	--	41.8	23.2	23.0	23.0	18.4
		6" (150)	15.5-150	32-270	76.0	--	164		--	--	41.8	23.2	23.0	23.0	18.4
100(150)MAE 415	20(15)	4" (100)	29-60	36-216	76.0	--	176		--	--	55.2	31.0	30.4	30.4	24.3
		6" (150)	21-150	36-312	76.0	--	176		--	--	55.2	31.0	30.4	30.4	24.3
100(150)MAE 422	30(22)	4" (100)	35.5-60	43-240	76.0	--	229		--	--	78.0	43.8	43.0	43.0	34.4
		6" (150)	27.5-150	43-336	76.0	--	229		--	--	78.0	43.8	43.0	43.0	34.4

Dimensions

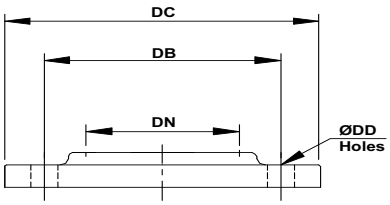

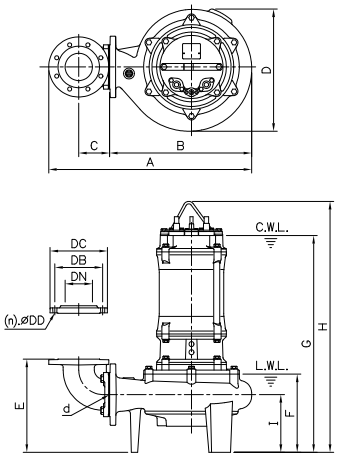

100(150)MAE-411/415/422

Elbow (Flange)set	Application model	Dimensions [mm]				Holes
		DN	DB	DC	DD	
EB4-175A	100 MAE 411	100	175	210	15	8
EB6-240(165)	150 MAE 411	150	240	280	23	8
EB4-175A	100 MAE 415	100	175	210	15	8
EB6-240(165)	150 MAE 415	150	240	280	23	8
EB4-175A	100 MAE 422	100	175	210	15	8
EB6-240(165)	150 MAE 422	150	240	280	23	8

Typ	Dimensions [mm]									
	d	A	B	C	D	E	F	G	H	I
100 MAE 411	100	743	520	113	447	341	286	793	918	211
150 MAE 411	100	803	520	143	447	371	286	793	918	211
100 MAE 415	100	743	520	113	447	341	286	793	918	211
150 MAE 415	100	803	520	143	447	371	286	793	918	211
100 MAE 422	100	778	555	113	476	352	297	834	979	222
150 MAE 422	100	838	555	143	476	382	297	834	979	222

GRS (Guid Rail System) Dimensions

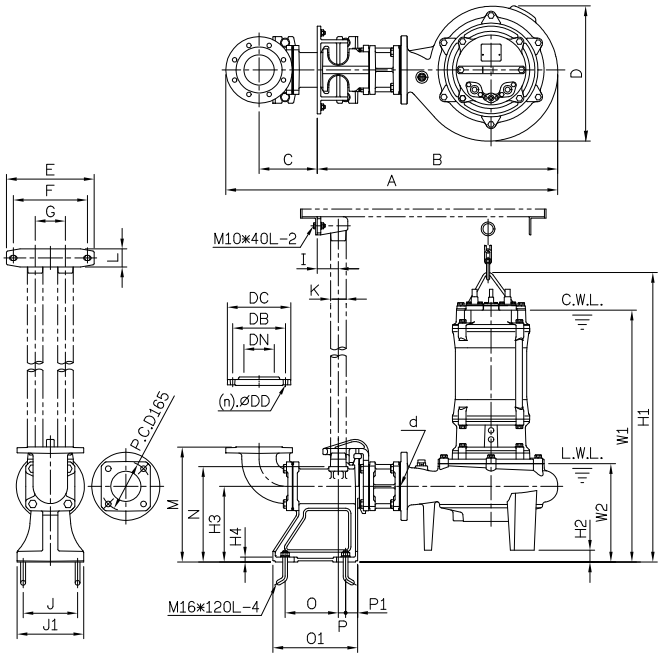

100(150)MAE 411/415/422 : GRS T100BH •T150(100)BH

Model	Dimensions [mm]																							
	DN	A	B	C	D	E	F	G	I	J	J1	K	L	M	N	O	O1	P	P1	W1	W2	H1	H2	H3	H4
100 MAE 411	100	1097	795	192	447	290	245	100	70	180	220	50	60	380	315	176	280	24	40	832	250	957	39	250	16
150 MAE 411	150	1158	795	223	447	290	245	100	70	180	220	50	60	410	315	176	280	24	40	832	250	957	39	250	16
100 MAE 415	100	1097	795	192	447	290	245	100	70	180	220	50	60	380	315	176	280	24	40	832	250	957	39	250	16
150 MAE 415	150	1158	795	223	447	290	245	100	70	180	220	50	60	410	315	176	280	24	40	832	250	957	39	250	16
100 MAE 422	100	1132	830	192	475	290	245	100	70	180	220	50	60	380	315	176	280	24	40	862	325	1007	39	250	16
150 MAE 422	150	1193	830	223	475	290	245	100	70	180	220	50	60	410	315	176	280	24	40	862	325	1007	39	250	16

MAG-55 • MAG-75 • MAG-610 • MAG-615

Specifications

Item		Description
Limits of use	Liquid Temp	0~40°C
	Applications	Dewatering Fluid contain solid sediment
	Submersion Depth	100feet (30m)
Type	Frequency	50Hz
	Motor	4P. Dry motor
	Insulation	Class H
	Protection	IP 68
	Protector	Auto-cut (MAG-615 : MTS)
	Bearing	Ball Type
	M.seal	Double M. Seals
	Impeller	Enclosed-channel
Material	Upper Cover	Cast Iron
	Motor Frame	Cast Iron
	Main shaft	SS420J2
	M. Seal	Lower: Silicon/Silicon Upper: Carbon /Ceramic
	Casing	Cast Iron
	Impeller	Cast Iron + Heat treatment
	Agitator	FCD-700 + Heat treatment
	Wear ring	MAG-610/615: Chrome steel
	Casing Cover	MAG-55/75:Cast Iron + Heat treatment MAG-610/615:Cast Iron
	Cable	VCT or H-07RN-F or SOW (10HP/230V:SJOW)

MAG-55 MAG-610 MAG-615

Performance Curves

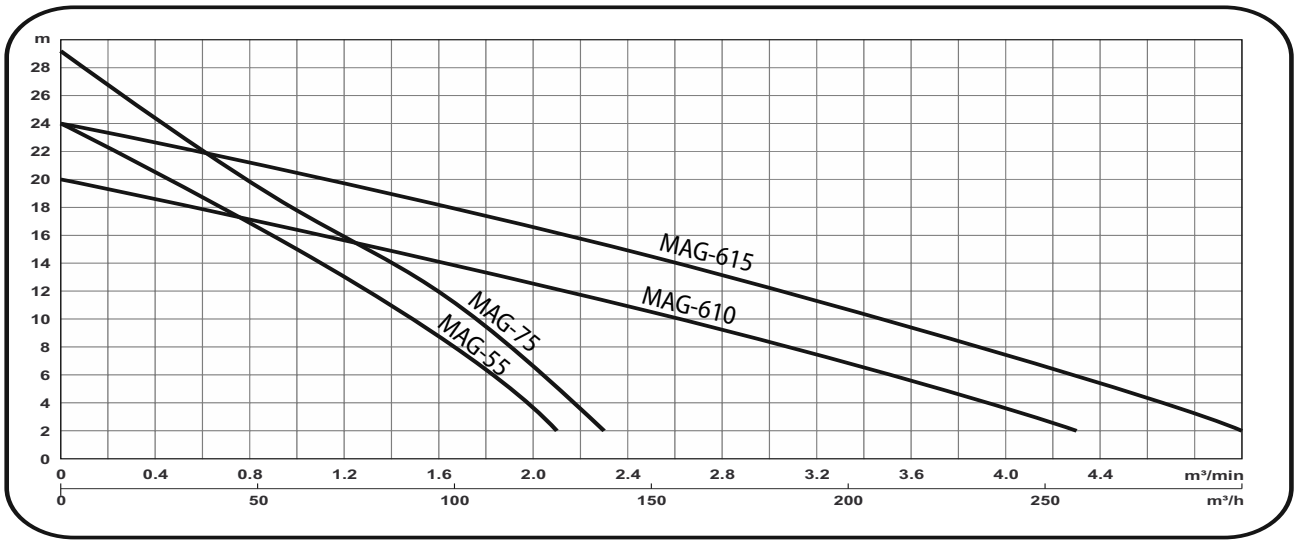

Model	Power HP (kW)	Discharge Inch (mm)	Q:m³/min	1	1.5	2.0	2.5	3.0	3.5	4	4.5
			Q:m³/h	60	90	120	150	180	210	240	270
MAG-55	7½ (5.5)	4" (100)	H (m)	14.7	9	3.7	--	--	--	--	--
MAG-75	10 (7.5)	4" (100)		17.9	13	6	--	--	--	--	--
MAG-610	10 (7.5)	6" (150)		16.2	14.7	12.8	11	8	6	3.7	--
MAG-615	15 (11)	6" (150)		20.5	18.5	16.6	14.7	12	10	7.5	5

Model	Power HP (kW)	Discharge inch (mm)	Standard m - m³/h	Solid Passage	Weight (W/O Cable) 1ø - kg	Weight (W/O Cable) 3ø - kg	Phase Voltage	1ø 220V	1ø 230V	1ø 240V	3ø 230V	3ø 380V	3ø 400V	3ø 415V
MAG-55	7½ (5.5)	4" (100)	15 - 60	26	--	146	Full Load Ampere	--	--	--	21.8	12.7	12.6	12
MAG-75	10 (7.5)	4" (100)	18 - 60	26	--	160		--	--	--	27.6	16.2	16	15.2
MAG-610	10 (7.5)	6" (150)	10.5 - 150	54	--	220		--	--	--	27.6	16.2	15.4	15.2
MAG-615	15 (11)	6" (150)	14.5 - 150	54	--	261		--	--	--	39.2	23.2	22.6	21.5

Dimensions

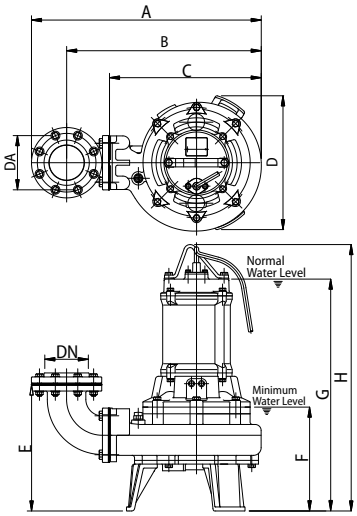

MAG-55

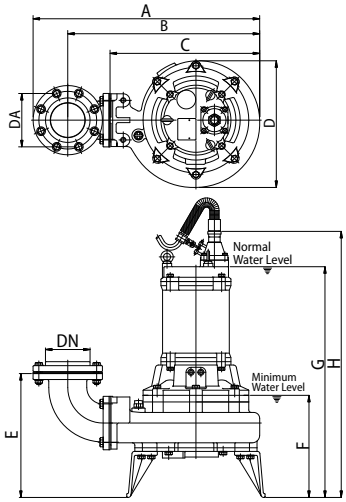

MAG-75

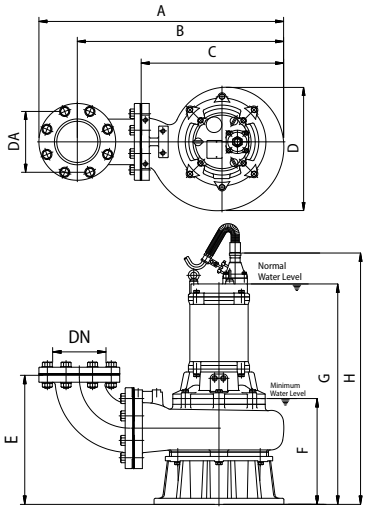

MAG-610 • MAG-615

Model	Dimensions[mm]									
	DN	DA	A	B	C	D	E	F	G	H
MAG-55	100	175	687	581	453	405	376	310	691	795
MAG-75	100	175	687	582	453	405	377	311	707	816
MAG-610	150	240	888	748	559	449	493	365	762	870
MAG-615	150	240	895	755	566	477	450	367	885	988

GRS (Guid Rail System) Dimensions

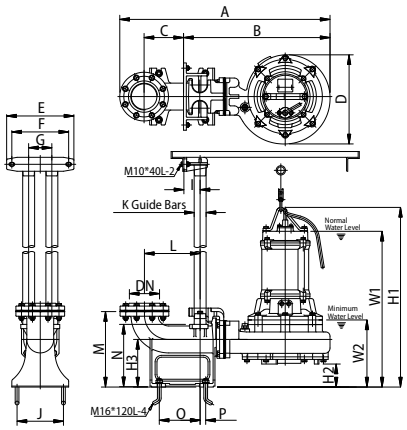

MAG-55 : GRS T100A

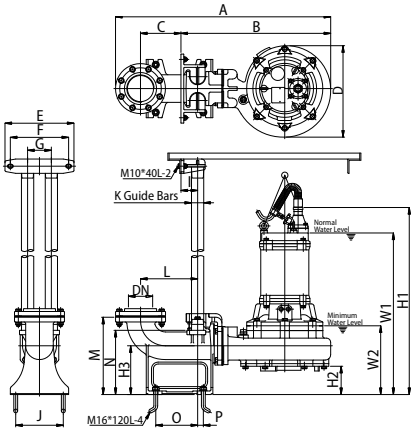

MAG-75 : GRS T100A

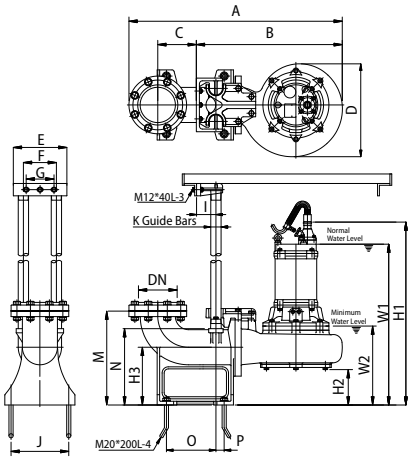

MAG-610 • MAG-615 : GRS T150

Model	Dimensions [mm]																				
	DN	A	B	C	D	E	F	G	I	J	K	L	M	N	O	P	W1	W2	H1	H2	H3
MAG-55	100	907	632	170	385	290	245	100	70	200	50	240	325	270	176	24	670	290	774	99	205
MAG-75	100	923	648	170	385	290	245	100	70	200	50	240	325	270	176	24	685	289	794	118	205
MAG-610	150	1035	708	187	449	260	160	135	95	280	50	--	455	370	240	40	779	382	887	182	280
MAG-615	150	1035	708	187	449	260	160	135	95	280	50	--	455	370	240	40	922	384	1043	182	280

MA-815 • MA-820 • MA-830

Specifications

Item		Description
Limits of use	Liquid Temp	0~40°C
	Applications	Aquaculture Water • Industrial Waste Water And Sewage
	Submersion Depth	100feet (30m)
Type	Frequency	50Hz
	Motor	4P • Dry motor
	Insulation	Class H
	Protection	IP68
	Protector	Miniature thermal sensor (10HP : Auto cut)
	Bearing	Ball type
	M.seal	Double M.seal
	Impeller	Enclosed-channel
Material	Upper Cover	Cast Iron
	Motor Frame	Cast Iron
	Main Shaft	SS420J2
	M.seal	Lower: Silicon/Silicon Upper: Carbon/Ceramic
	Casing	Cast Iron
	Impeller	Cast Iron
	Cable	VCT or H07RN-F or SOW (10HP/230V : SJOW)

MA-815

MA-820

MA-830

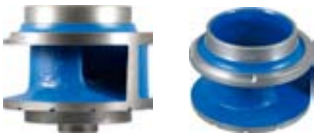

Enclosed-channel Impeller

Performance Curves

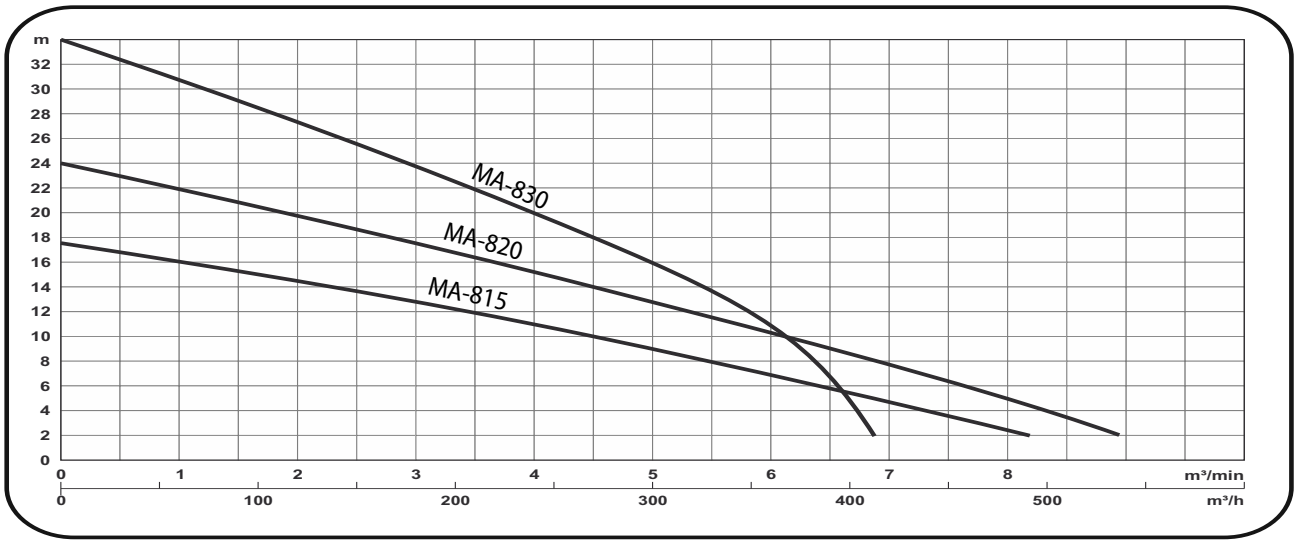

Model	Power HP (kW)	Discharge Inch (mm)	Q:m³/min	1	2	3	4	5	6	7	9
			Q:m³/h	60	120	180	240	300	360	420	540
MA-815	15 (11)	8" (200)	H (m)	15.9	14.2	12.4	10.7	9.2	7.2	5.1	--
MA-820	20 (15)	8" (200)		21.9	19.8	17.7	15.2	12.8	10.3	7.6	1.9
MA-830	30 (22)	8" (200)		31	27	24	20	16	10	--	--

Model	Power HP (kW)	Discharge inch (mm)	Standard m - m³/h	Max m - m³/h	Solid Passage mm	Weight (W/O Cable) 1ø - kg	3ø - kg	Phase Voltage	1ø 220V	1ø 230V	1ø 240V	3ø 230V	3ø 380V	3ø 400V	3ø 415V
MA-815	15 (11)	8" (200)	10 - 270	17.5 - 540	75	--	270	Full Load Ampere	--	--	--	--	23	22	21
MA-820	20 (15)	8" (200)	14 - 270	24 - 570	75	--	285		--	--	--	--	31.5	31	30.4
MA-830	30 (22)	8" (200)	18 - 270	34 - 420	76	--	310		--	--	--	76	43	42	40

Dimensions

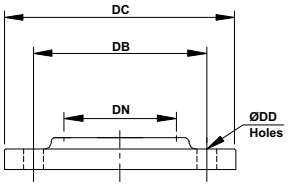

EB6-240 • EB6-240(165) • EB8-290

Nomenclature : EB 6 - 240
Elbow Set / Discharge (inch-DN) / Pitch Circle Diameter (mm-DB)

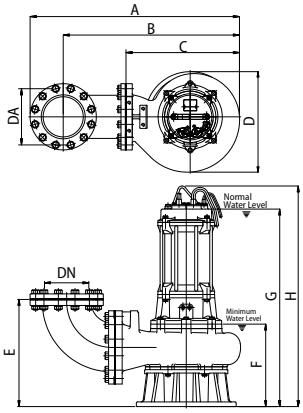

MA-815 • MA-820

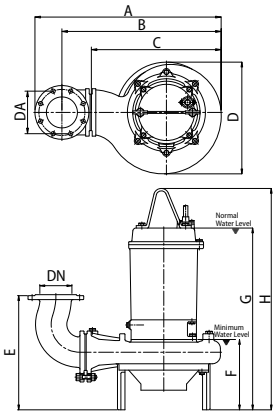

MA-830

Elbow (flange) set	Application Model	Dimensions [mm]				Holes
		DN	DB	DC	DD	
EB8-290	MA-815	200	290	330	19	12
EB8-290	MA-820	200	290	330	19	12
EB8-290	MA-830	200	290	330	19	12

Model	Dimensions [mm]									
	DN	DA	A	B	C	D	E	F	G	H
MA-815	200	290	1045	880	661	501	483	372	890	994
MA-820	200	290	1045	880	661	501	483	372	890	994
MA-830	200	200	896	731	581	479	411	285	848	998

GRS (Guid Rail System) Dimensions

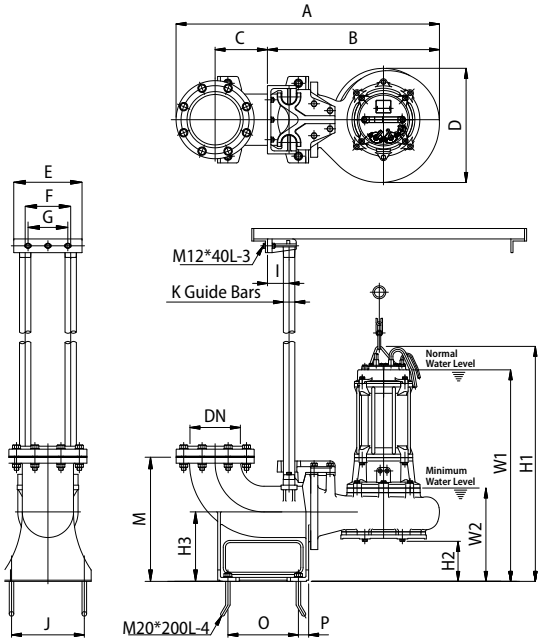

MA-815 • MA-820 GRS : T200

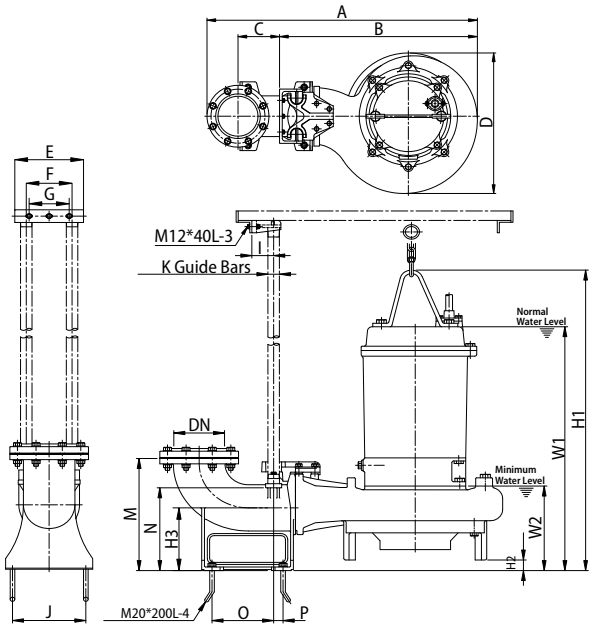

MA-830 GRS : T200E

Model	Dimensions [mm]																			
	DN	A	B	C	D	E	F	G	I	J	K	M	N	O	P	W1	W2	H1	H2	H3
MA-815	200	1159	757	230	491	300	200	175	95	320	50	545	--	269	41	928	410	1032	176	305
MA-820	200	1159	757	230	491	300	200	175	95	320	50	545	--	269	41	928	410	1032	176	305
MA-830	200	1228	826	230	479	300	300	175	95	320	50	545	423	296	41	858	285	1008	10	305

MA-840 • MA-850 • MA-860

Specifications

Item		Description
Limits of use	Liquid Temp	0 ~ 40 °C
	Applications	Wastewater /Sewage
Type	Frequency	50Hz
	Motor	4P(1500rpm) • Dry motor
	Insulation	Class H
	Protection	IP68
	Protector	MTS & MS
	Bearing	Ball type
	M.seal	Double M.seal
	Impeller	Semi-Open
Material	Outer Cover	Cast Iron
	Motor Frame	Cast Iron
	Main Shaft	SS420J2
	M.seal	Lower: Silicon/Silicon Upper: Carbon/Ceramic
	Casing	Cast Iron
	Impeller	Cast Iron
	Cable	PNCT
Optional		--

Semi-Open Impeller

Performance Curves

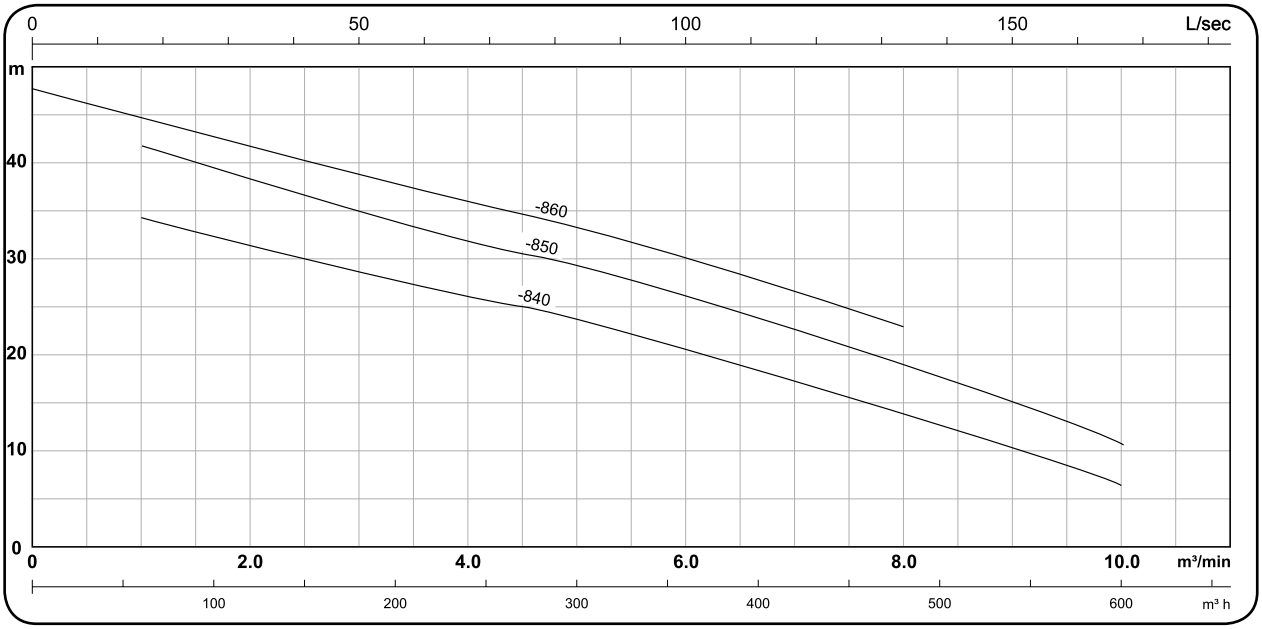

Model	Power HP (kW)	Discharge inch (mm)	Q:m³/min	1	2	3	4	5	6	8	10
			Q:m³/h	60	120	180	240	300	360	480	600
MA-840	40(30)	8" (200)	H (m)	34.4	31.4	28.6	21.2	23.8	20.8	14	6.4
MA-850	50(37)	8" (200)		41.6	38.2	34.8	31.6	29.2	26	18.8	10.6
MA-860	60(45)	8" (200)		44.8	41.8	38.8	36.0	33.2	30.0	23	--

Model	Power HP (kW)	Discharge inch (mm)	Standard m - m³/h	Max m - m³/h	Solid Passage mm	Weight (W/O Cable) 1ø - kg	3ø - kg	Phase Voltage	1ø 220V	1ø 230V	3ø 230V	3ø 380V	3ø 400V	3ø 415V
MA-840	40(30)	8"(200)	24-270	--	70(2 3/4")	--	355	Full Load Ampere	--	--	--	59.0	58.0	58.5
MA-850	50(37)	8"(200)	29-270	--	60(2 3/4")	--	418		--	--	--	72.5	72.5	73.5
MA-860	60(45)	8"(200)	34-270	--	60(2 3/8")	--	456		--	--	--	88.0	87.5	88.5

Dimensions

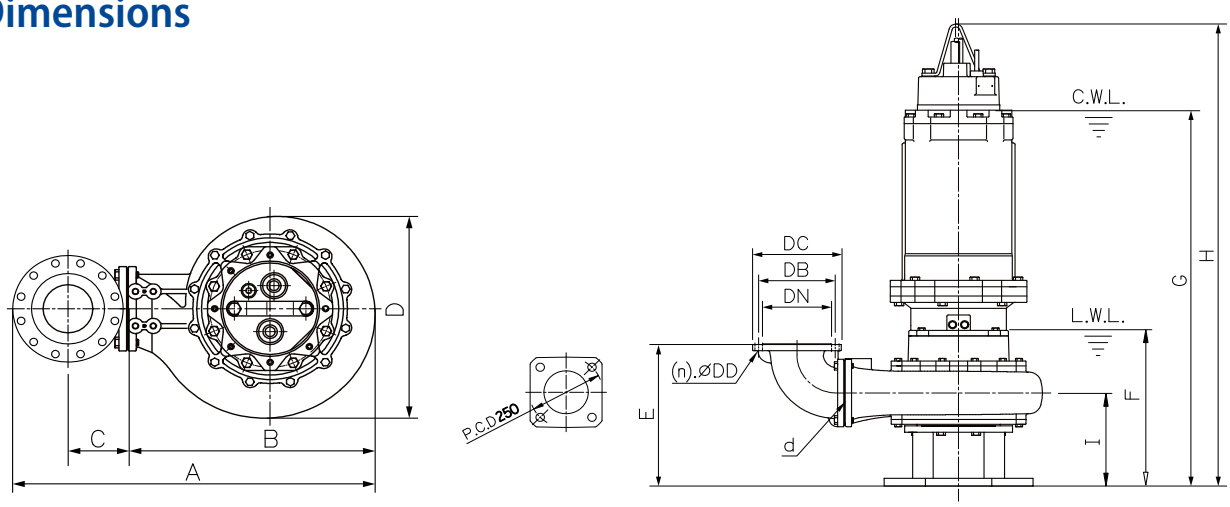

MA-840 •MA-850 •MA-860

Elbow (flange) set	Application Model	Dimensions [mm]				Holes
		DN	DB	DC	DD	
EB8-290(240)	MA-840	200	290	330	23	12
EB8-290(240)	MA-850	200	290	330	23	12
EB8-290(240)	MA-860	200	290	330	23	12

Model	Dimensions [mm]									
	d	A	B	C	D	E	F	G	H	I
MA-840	150	937	622	150	520	483	620	1080	1284	300
MA-850	150	937	622	150	520	483	620	1165	1434	300
MA-860	150	937	622	150	520	483	620	1165	1434	300

GRS (Guid Rail System) Dimensions

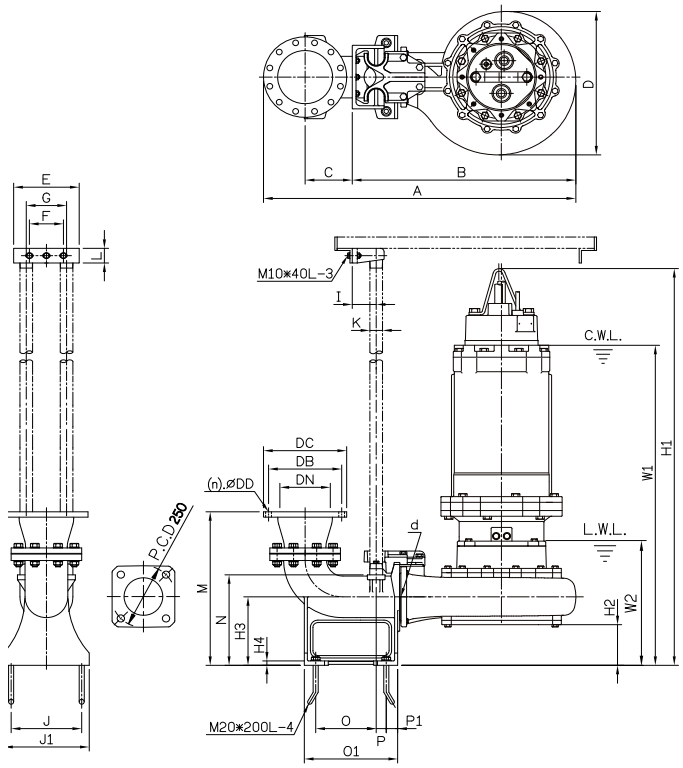

MA-840 •MA-850 •MA-860: GRS T 200E

Model	Dimensions [mm]																							
	d	A	B	C	D	E	F	G	I	J1	J	K	L	M	N	O	O1	P	P1	W1	W2	H1	H2	H3	H4
MA-840	150	1157	807	185	520	260	135	160	95	340	280	50	60	628	370	240	370	40	45	1089	525	1393	205	280	18
MA-850	150	1157	807	185	520	260	135	160	95	340	280	50	60	628	370	240	370	40	45	1174	525	1443	205	280	18
MA-860	150	1157	807	185	520	260	135	160	95	340	280	50	60	628	370	240	370	40	45	1174	525	1443	205	280	18

MA-1030S • MA-1040 • MA-1050

Specifications

Item		Description
Limits of use	Liquid Temp	0~40°C
	Applications	Aquaculture Water • Industrial Waste Water And Sewage
	Submersion Depth	100feet (30m)
Type	Frequency	50Hz
	Motor	4P • Dry motor
	Insulation	Class H
	Protection	IP68
	Protector	Miniature thermal sensor Moisture sensor
	Bearing	Ball type
	M.seal	Double M.seal
	Impeller	Enclosed-channel
Material	Upper Cover	Cast Iron
	Motor Frame	Cast Iron
	Main Shaft	SS420J2
	M.seal	Lower: Silicon/Silicon Upper: Silicon/Silicon
	Casing	Cast Iron
	Impeller	Cast Iron
	Wear Ring	Stainless steel
	Cable	PNCT or H07RN-F (MA-1030S / MA-1040)
Optional		Bearing thermal sensor

MA-1030S MA-1040 MA-1050

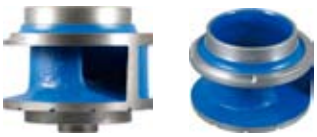

Enclosed-channel Impeller

Performance Curves

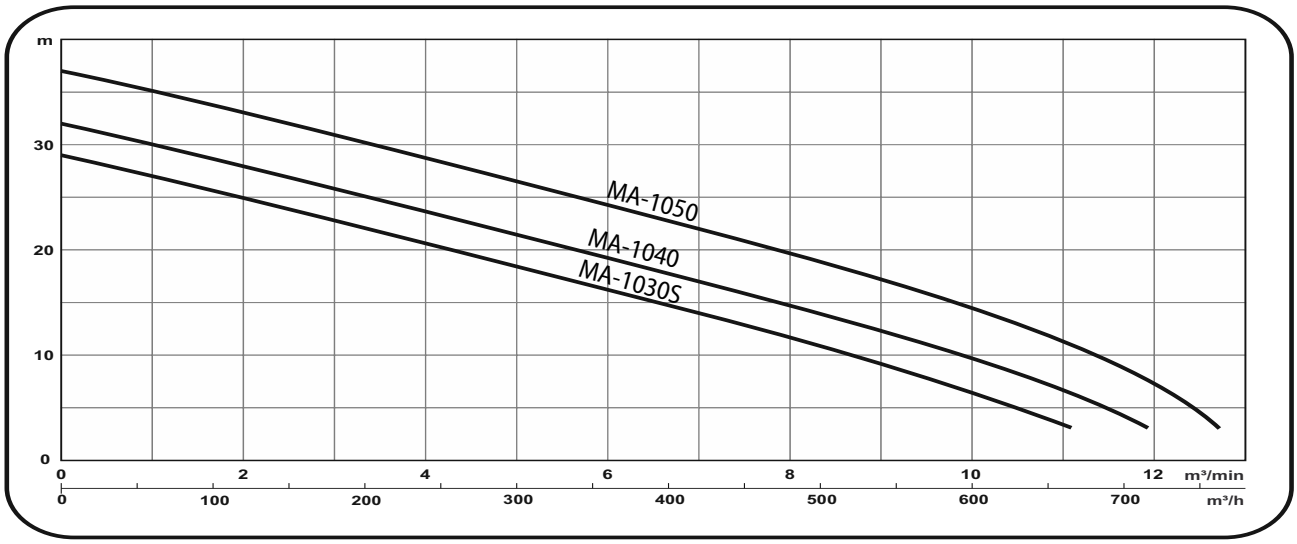

Model	Power HP (kW)	Discharge Inch (mm)	Q:m³/min	2	4	6	8	9	10	11	12
			Q:m³/h	120	240	360	480	540	600	660	720
MA-1030S	30 (22)	10" (250)	H (m)	25	21	16	12	9	6	3	--
MA-1040	40 (30)	10" (250)		28	23	19	15	12	9	6	3
MA-1050	50 (37)	10" (250)		33	29	24	19	17	14	11	7

Model	Power HP (kW)	Discharge inch (mm)	Standard m - m³/h	Max m - m³/h	Solid Passage mm	Weight (W/O Cable) 1ø - kg	3ø - kg	Phase Voltage	1ø 220V	1ø 230V	1ø 240V	3ø 220V	3ø 380V	3ø 400V	3ø 415V
MA-1030S	30 (22)	10" (250)	14 - 420	30 - 720	60	--	755	Full Load Ampere	--	--	--	82	47.5	--	43.5
MA-1040	40 (30)	10" (250)	17 - 420	32 - 750	60	--	760		--	--	--	108	62.4	--	57
MA-1050	50 (37)	10" (250)	22 - 420	37 - 780	60	--	770		--	--	--	132	76.2	--	69.8

Dimensions

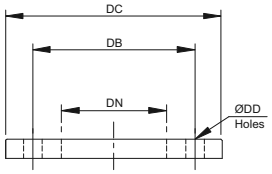

EB10-355

Nomenclature : EB 10 - 355
Elbow Set / Discharge (inch-DN) / Pitch Circle Diameter (mm-DB)

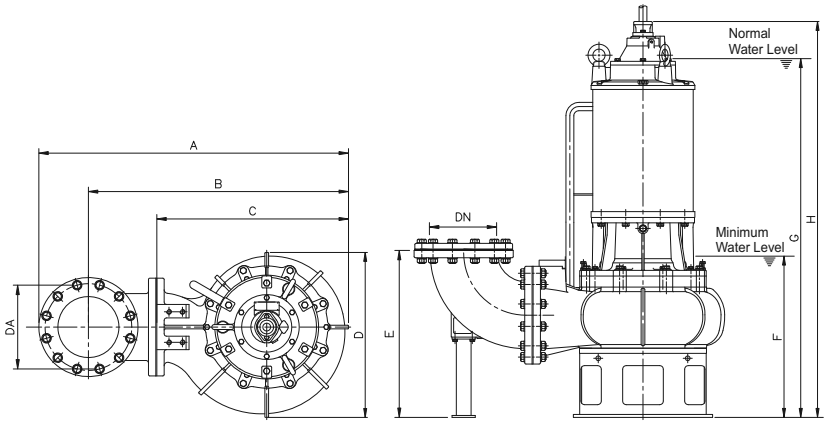

MA-1030S • MA-1040 • MA-1050

Elbow (flange) set	Application Model	Dimensions [mm]					Holes
		DN	DA	DB	DC	DD	
EB10-355	MA-1030S	250	--	355	406	25	12
EB10-355	MA-1040	250	--	355	406	25	12
EB10-355	MA-1050	250	--	355	406	25	12

Model	Dimensions [mm]									
	DN	DA	A	B	C	D	E	F	G	H
MA-1030S	250	355	1273	1070	787	676	684	660	1500	1621
MA-1040	250	355	1273	1070	787	676	684	660	1500	1621
MA-1050	250	355	1273	1070	787	676	684	660	1500	1621

GRS (Guid Rail System) Dimensions

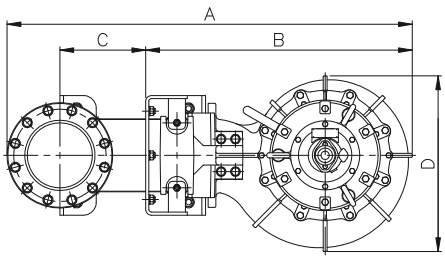

MA-1030S : GRS T250

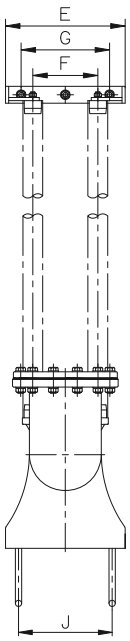

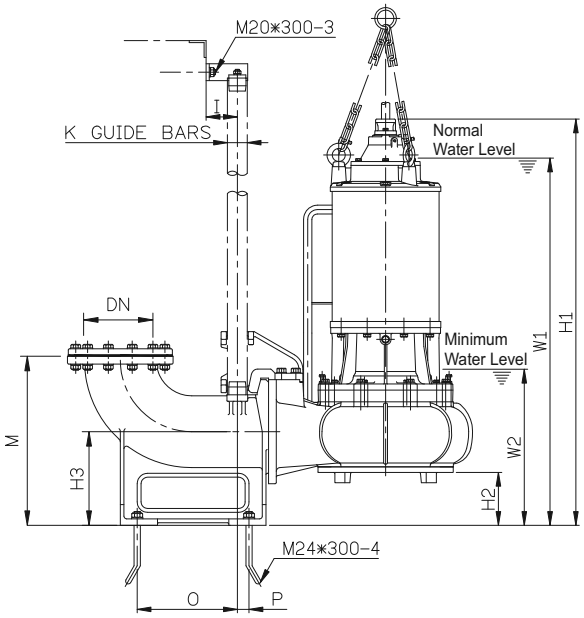

MA-1040 • MA-1050 : GRS T250

Model	Dimensions[mm]																		
	DN	A	B	C	D	E	F	G	I	J	K	M	O	P	W1	W2	H1	H2	H3
MA-1030S	250	1558	1025	330	676	460	340	250	120	360	65	650	385	45	1412	602	1562	203	360
MA-1040	250	1558	1025	330	676	460	340	250	120	360	65	650	385	45	1412	602	1562	203	360
MA-1050	250	1558	1025	330	676	460	340	250	120	360	65	650	385	45	1412	602	1562	203	360

MA-1430 • MA-1440

Specifications

Item		Description
Limits of use	Liquid Temp	0~40℃
	Applications	Aquaculture Water • Industrial Waste Water And Sewage
	Submersion Depth	100feet (30m)
Type	Frequency	50Hz
	Motor	6P • Dry motor
	Insulation	Class H
	Protection	IP68
	Protector	Miniature thermal sensor Moisture sensor
	Bearing	Ball type
	M.seal	Double M.seal
	Impeller	Enclosed-channel
Material	Upper Cover	Cast Iron
	Motor Frame	Cast Iron
	Main Shaft	SS420J2
	M.seal	Lower: Silicon/Silicon Upper: Silicon/Silicon
	Casing	Cast Iron
	Impeller	Cast Iron
	Wear Ring	Stainless steel
	Cable	PNCT or H07RN-F
Optional		Bearing thermal sensor

MA-1430

MA-1440

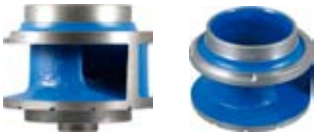

Enclosed-channel Impeller

Performance Curves

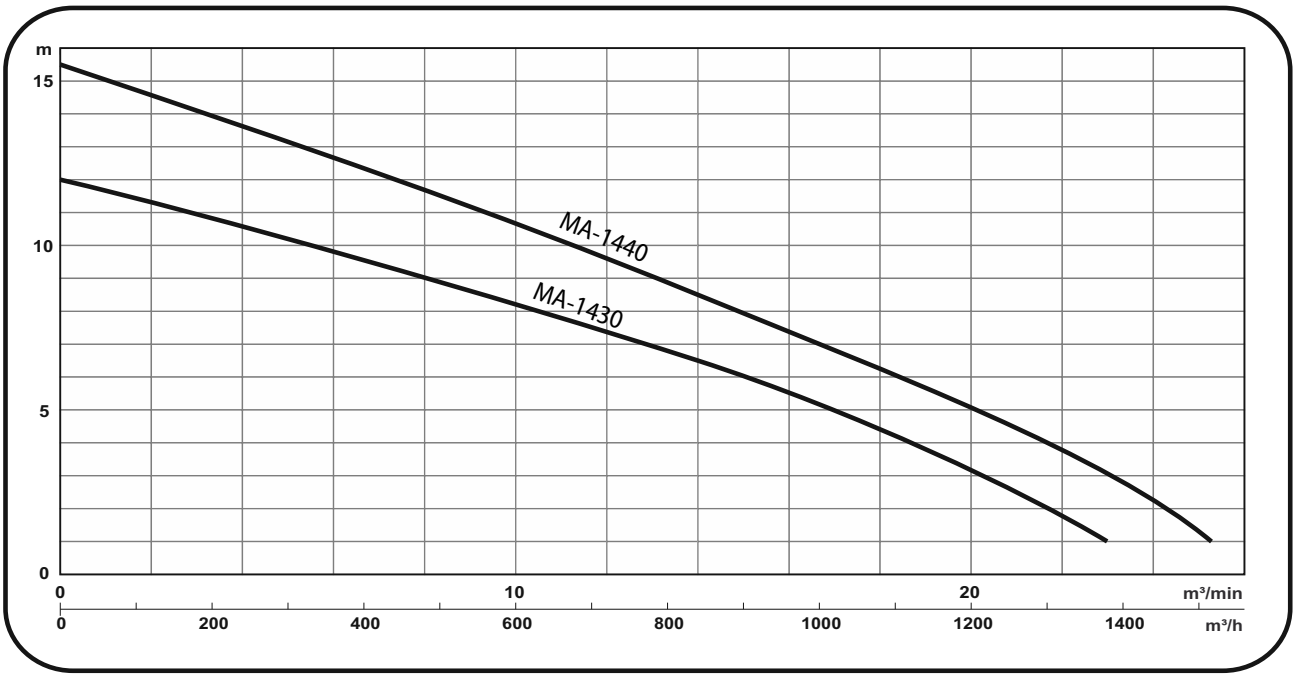

Model	Power HP (kW)	Discharge Inch (mm)	Q:m³/min	2	6	10	14	18	20	22	24
			Q:m³/h	120	360	600	840	1080	1200	1320	1440
MA-1430	30 (22)	14" (350)	H (m)	11.3	9.8	8.2	6.5	4.4	3.2	1.8	--
MA-1440	40 (30)	14" (350)		14.5	12.7	10.7	8.5	6.2	5.1	3.8	2.2

Model	Power HP (kW)	Discharge inch (mm)	Standard m - m³/h	Max m - m³/h	Solid Passage mm	Weight (W/O Cable) 1ø - kg	Weight (W/O Cable) 3ø - kg	Phase Voltage	1ø 220V	1ø 230V	3ø 220V	3ø 380V	3ø 400V	3ø 415V	3ø 440V
MA-1430	30 (22)	14" (350)	6 - 840	14 - 1440	120	--	950	Full Load Ampere	--	--	84	48.5	47.8	44.4	42
MA-1440	40 (30)	14" (350)	8.5 - 840	15 - 1620	120	--	955		--	--	114	66	65.1	60.4	57.2

Dimensions

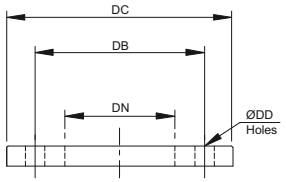

EB14-445

Nomenclature : EB 14 - 445
Elbow Set / Discharge (inch-DN) / Pitch Circle Diameter (mm-DB)

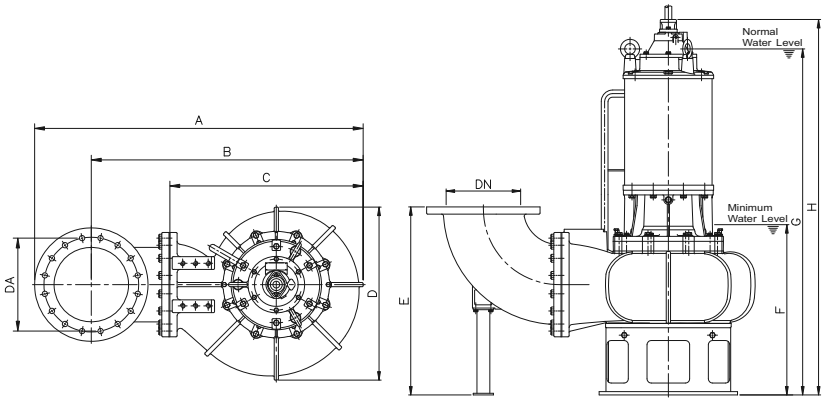

MA-1430 • MA-1440

Elbow (flange) set	Application Model	Dimensions [mm]					Holes
		DN	DA	DB	DC	DD	
EB14-445	MA-1430	350	--	445	533	25	16
EB14-445	MA-1440	350	--	445	533	25	16

Model	Dimensions [mm]									
	DN	DA	A	B	C	D	E	F	G	H
MA-1430	350	445	1544	1277	899	813	884	800	1645	1764
MA-1440	350	445	1544	1277	899	813	884	800	1645	1764

GRS (Guid Rail System) Dimensions

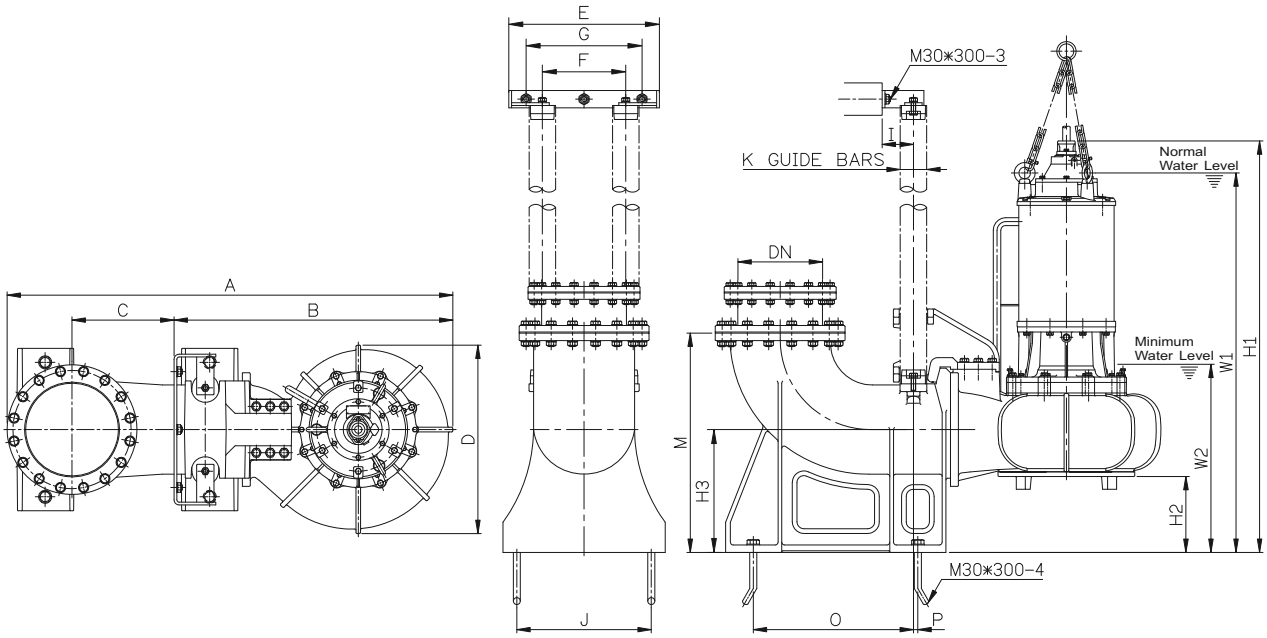

MA-1430 • MA-1440 : GRS T350

Model	Dimensions[mm]																	
	DN	A	B	C	D	E	F	G	I	J	K	M	O	P	W1	W2	H1	H2	H3
MA-1430	350	1923	1203	440	813	650	500	360	135	580	100	950	691	19	1625	812	1775	372	530
MA-1440	350	1923	1203	440	813	650	500	360	135	580	100	950	691	19	1625	812	1775	372	530

MA-1650 • MA-1660

Specifications

Item		Description
Limits of use	Liquid Temp	0~40°C
	Applications	Aquaculture Water • Industrial Waste Water And Sewage
	Submersion Depth	100feet (30m)
Type	Frequency	50Hz
	Motor	6P • Dry motor
	Insulation	Class H
	Protection	IP68
	Protector	Miniature thermal sensor Moisture sensor
	Bearing	Ball type
	M.seal	Double M.seal
	Impeller	Enclosed-channel
Material	Upper Cover	Cast Iron
	Motor Frame	Cast Iron
	Main Shaft	SS420J2
	M.seal	Lower: Silicon/Silicon Upper: Silicon/Silicon
	Casing	Cast Iron
	Impeller	Cast Iron
	Wear Ring	Stainless steel
	Cable	PNCT
Optional		Bearing thermal sensor

MA-1650

MA-1660

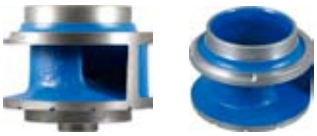

Enclosed-channel Impeller

Performance Curves

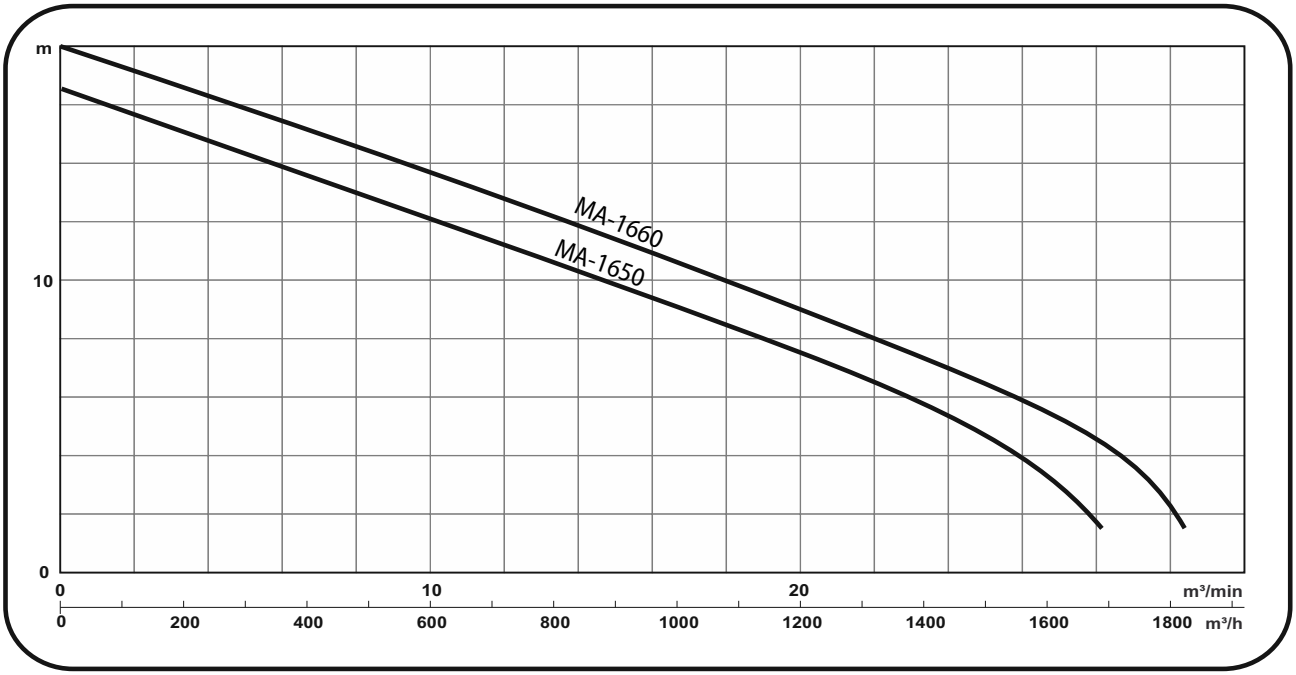

Model	Power HP (kW)	Discharge Inch (mm)	Q:m³/min	2	6	10	14	18	22	26	28
			Q:m³/h	120	360	600	840	1080	1320	1560	1680
MA-1650	50 (37)	16" (400)	H (m)	15.7	13.9	12.1	10.3	8.5	6.5	3.9	--
MA-1660	60 (45)	16" (400)		17.2	15.4	13.7	11.9	10	7.9	5.9	3.7

Model	Power HP (kW)	Discharge inch (mm)	Standard	Max	Solid Passage mm	Weight (W/O Cable)		Phase	1ø	1ø	3ø	3ø	3ø	3ø	3ø
			m - m³/h	m - m³/h		1ø - kg	3ø - kg	Voltage	220V	230V	220V	380V	400V	415V	440V
MA-1650	50 (37)	16" (400)	7.5 - 1200	16.5 - 1740	120	--	965	Full Load Ampere	--	--	139	80.2	79.1	73.4	69.5
MA-1660	60 (45)	16" (400)	9 - 1200	18 - 1860	120	--	970		--	--	162	93.5	92.2	85.6	81

Dimensions

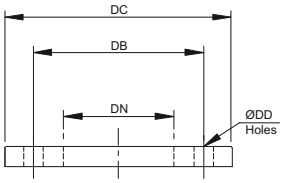

EB16-510(445)

Nomenclature : EB 16 - 510 (445)
Elbow Set / Discharge (inch-DN) / Outlet PCD (mm-DB) / Inlet PCD (mm-DB)

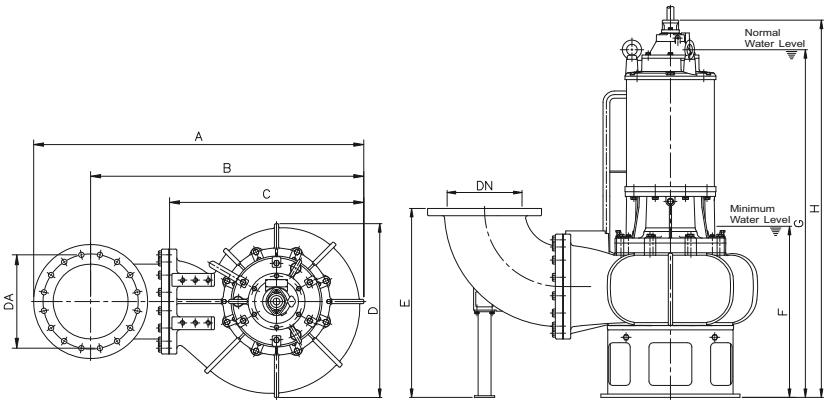

MA-1650 • MA-1660

Elbow (flange) set	Application Model	Dimensions [mm]					Holes
		DN	DA	DB	DC	DD	
EB16-510(445)	MA-1650	400	--	510	560	25	16
EB16-510(445)	MA-1660	400	--	510	560	25	16

Model	Dimensions [mm]									
	DN	DA	A	B	C	D	E	F	G	H
MA-1650	400	445	1544	1277	899	813	884	800	1645	1764
MA-1660	400	445	1544	1277	899	813	884	800	1645	1764

GRS (Guid Rail System) Dimensions

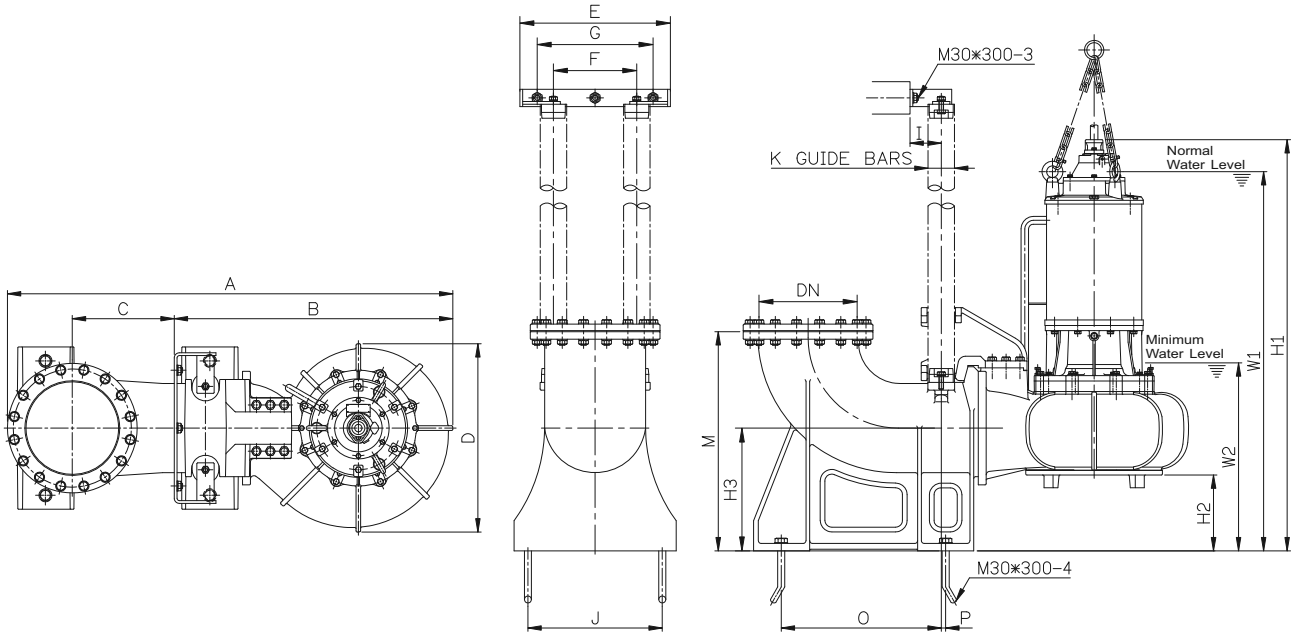

MA-1650 • MA-1660 : GRS T400

Model	Dimensions[mm]																		
	DN	A	B	C	D	E	F	G	I	J	K	M	O	P	W1	W2	H1	H2	H3
MA-1650	400	1923	1203	440	813	650	500	360	135	580	100	950	691	19	1625	812	1775	372	530
MA-1660	400	1923	1203	440	813	650	500	360	135	580	100	950	691	19	1625	812	1775	372	530

Heavy Duty Submersible Pumps

MA 615-630

MA 815-830

MA 1030S and above

MA 1030S (come with GRS and above

Definition of model

MA	-	6		10
Type		Discharge		PS

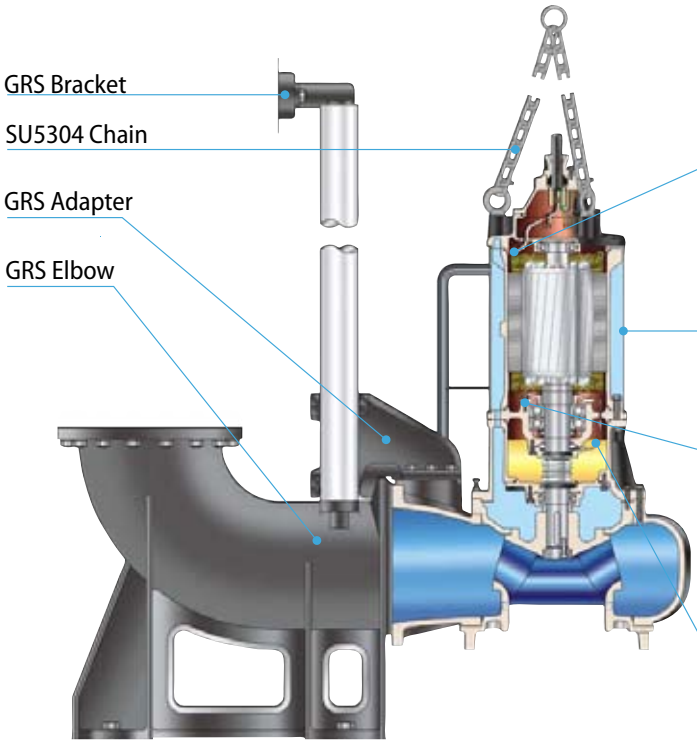

Motor Thermal Senso(MTS)

MTS is a bimetal type motor protector, which is embedded in each phase of stator winding. When overheat is detected, the sensor (in winding) will trip and the rely switch (in control box) will cut off the power supply of pump. (MTS is a regular component of pump, 1sHP and above).

Cooling Jacket

When pump is pumping, the water flow between cooling jacket and motor frame, and reduce temperature of motor frame. (Cooling Jacket is a regular component of pump model, MA-10305 and above)Bearing Temperature

Bearing Temperature Sensor(BTS)

The BTS is a temperature sensor which is installed in the stationary of bearing. The BTS has to be connected to indicator of temperature control in control box. When the bearing temperature exceed the pre-setting temperature of indicator of temperature control, the rely switch will cut off the power supply of pump. (BTS is an optional component of pump model, MA-10305 and above).

Moisture Sensor (MS)

MS is an electrode sensor of water intrusion in oil chamber. When water leakage is detected, the rely switch (in control box) will cut off the power supply of pump. (MS is a regular component of pump, 1 5HP and above). Thus, the damaged mechanical seal and lubricant can be replaced before water leakage occurs in motor housing. (MS is a regular component of pump, 1 SHP and above).

Specifications(discharge 150~400mm)

Item		Description
Limits of use	Liquid temperature	0 ~ 40 °C
	Appliactions	Wastewater/Sewage/Industrial wastewater
Type	Frequency	50Hz
	Motor	4-pole(1500rpm), 6-pole(1000rpm) Dry motor
	Insulation	Class F F
	Protection	IP 68
	Protector	MTS and MS
	Bearing	Ball type
	M.Seal	Double mechanical seal
	Impeller	Enclosed channel€
Material	Upper cover	FC200
	Motor Frame	FC200
	Shaft	SUS 420J2
	M.Seal	CA/CE & SIC/SIC
	Casing	FC200
	Impeller	FC200
	Cable	VCT/PNCT/H07RN-F
Optional		Pump can be customized to fit specifications

ACCESSORIES : Elbow/GRS System

Pump can be installed with 90' Elbow with Flange outlet or GRS quick coupling system, for quick and safer for installation, removal, replacement and maintenance purpose.

Elbow GRS

H Series • Sewage Pumps

Power: 0.4 ~2.2 kW
Max. Head: 21 m
Max. Capacity: 66 m^3/h

Feature

- A precision manufactured motor is achieved utilizing the highest standard of quality control. To ensure a 100% quality manufactured motor with stable characteristics and a highest efficiency. All rotor adopted heat treatment method for drive shaft assembling and stator winding impregnated with varnish and heat dried in industrial oven.
- SPCO's professional assembly line, complimented with a synthesized production test ensures the highest level of final pump quality.
- Standard accessories include: cable with an epoxy resin sealed water-resistant cable base, AC thermal motor protector, dual mechanical seal and lip seal design.
- U type Vortex impeller or P type cutter impeller design, handle any wastewater or sewage application with the best de-watering efficiency.
- Full product line range, providing the best service, with high impact resistance and light weight, for easy of service and transportation.
- The H-05A is an extremely practical and low temperature oil filled motor and single seal design pump.

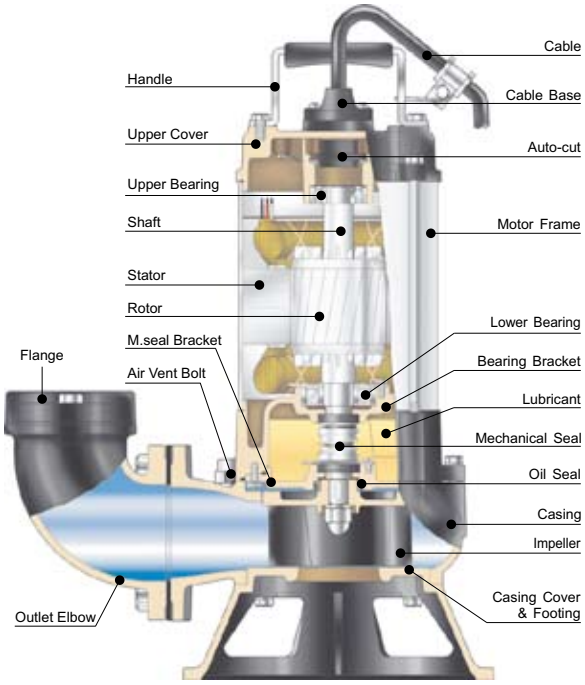

Applications

- Drainage of sewage from the building basements, hotel industry, wastes water from factories.
- Drainage of sewage from industrial process factories.
- Emptying of septic tanks, cesspits and sewage pump stations.
- Pumping surface and drainage water from garages and sprinkler systems.

Definition of model

H	-	05	A
Type		½HP	Style

H	-	2	1	T	U	F
Type		Discharge Inch	HP	Style	Impeller	Float

H-05A • H-05U • H-21U • H-31U

Specifications

Item		Description
Limits of use	Liquid Temp	0 - 40 °C
	Applications	General Waste water , Sewage and Industrial water
	Submersion Depth	100feet (30m)
Type	Frequency	50Hz
	Motor	2P • Dry motor (H-05A : Oil Motor)
	Insulation	Class B
	Protection	IP68
	Protector	Auto cut (H-05A 3Ø: none) (H-05A & H-05U 1Ø: Overheat)
	Bearing	Ball type
	M.seal	Double M.seal (H-05A : Single M.seal)
	Impeller	Semi-open
Material	Outer Cover	Cast Iron
	Motor Frame	SS304
	Main Shaft	SS410
	M.seal	Lower: Silicon/Silicon Upper: Carbon/Ceramic (H-05A: Carbon/Ceramic)
	Casing	Cast Iron
	Impeller	Cast Iron (H-05A : PA)
	Cable	VCT or H07RN-F or SJOW/SOW
Optional		Float switch (H-05A 3Ø : none)

H-05A H-05U H-31U

PA Type
Semi-open Impeller

U Type
Semi-open Impeller

Performance Curves

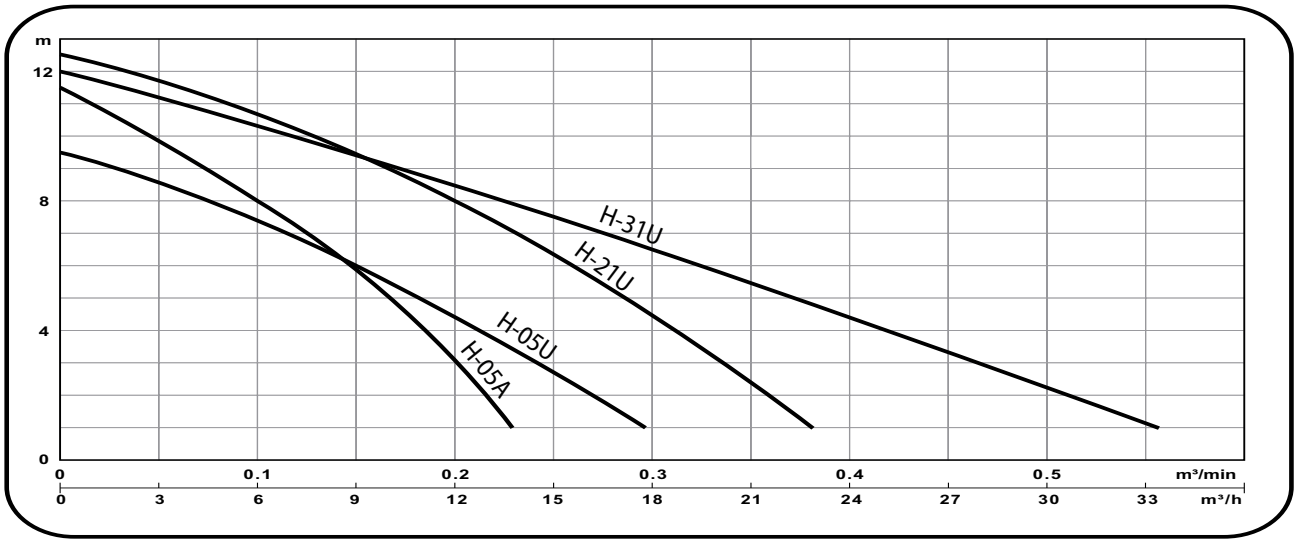

Model	Power HP (KW)	Discharge inch (mm)	Q:m³/min	0.05	0.1	0.15	0.2	0.25	0.3	0.5	0.55
			Q:m³/h	3	6	9	12	15	18	30	33
H-05A	½ (0.4)	2" (50)	H (m)	9.8	8	5.8	3.1	--	--	--	--
H-05U	½ (0.4)	2" (50)		8.5	7.4	6	4.4	2.7	--	--	--
H-21U	1 (0.75)	2" (50)		11.7	10.6	9.4	8	6.3	4.4	--	--
H-31U	1 (0.75)	3" (80)		11.2	10.3	9.4	8.4	7.5	6.5	2.2	1.1

Model	Power HP (KW)	Discharge inch (mm)	Standard m - m³/h	Max m - m³/h	Solid Passage	Weight (W/O Cable) 1ø - kg	Weight (W/O Cable) 3ø - kg	Phase Voltage	1ø 220V	1ø 230V	1ø 240V	3ø 230V	3ø 380V	3ø 400V	3ø 415V
H-05A	½ (0.4)	2" (50)	8-6	11-14.4	10	12	12	Full Load Ampere	3.1	3	2.9	2.2	1.3	1.3	1.2
H-05U	½ (0.4)	2" (50)	6-9	9.5-19.2	35	16	15		3.4	3.3	3.2	2.3	1.4	1.3	1.3
H-21U	1 (0.75)	2" (50)	8-12	12.5-24	35	18	17		5.4	5.2	5	3.3	2	1.9	1.8
H-31U	1 (0.75)	3" (80)	6.5-18	12-36	30	19	18		5.4	5.2	5	3.3	2	1.9	1.8

Dimensions

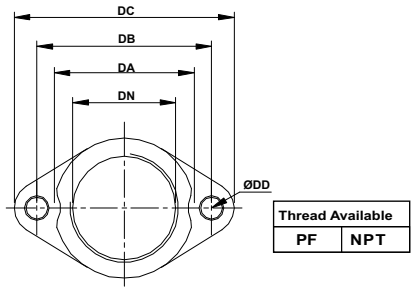

EF2-84 • EF2-96 • EF3-130

Nomenclature : EF 2 - 84
Flange Set / Discharge (inch-DN) / Pitch Circle Diameter (mm-DB)

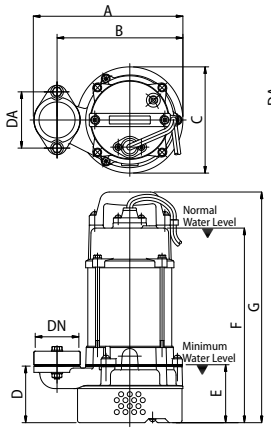

H-05A

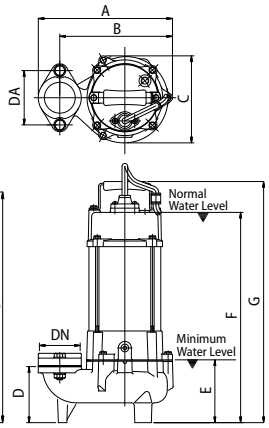

H-05U • H-21U

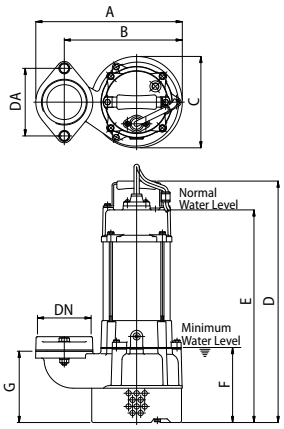

H-31

Elbow (flange) set	Application Model	Dimensions [mm]				
		DN	DA	DB	DC	DD
EF2-84	H-05A	50	72	84	105	9.5
EF2-96	H-05U	50	77	96	121	12
EF2-96	H-21U	50	77	96	121	12
EF3-130	H-31U	80	109	130	155	12

Model	Dimensions [mm]								
	DN	DA	A	B	C	D	E	F	G
H-05A	50	84	226	191	161	86	88	294	349
H-05U	50	96	237	199	154	99	109	372	427
H-21U	50	96	237	199	154	99	109	372	427
H-31U	80	130	278	224	173	457	403	142	135

GRS (Guide Rail System) Dimensions

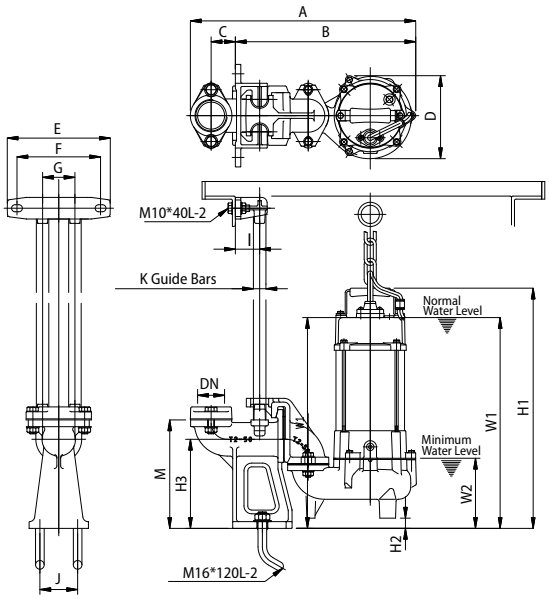

H-05A : GRS T2-50

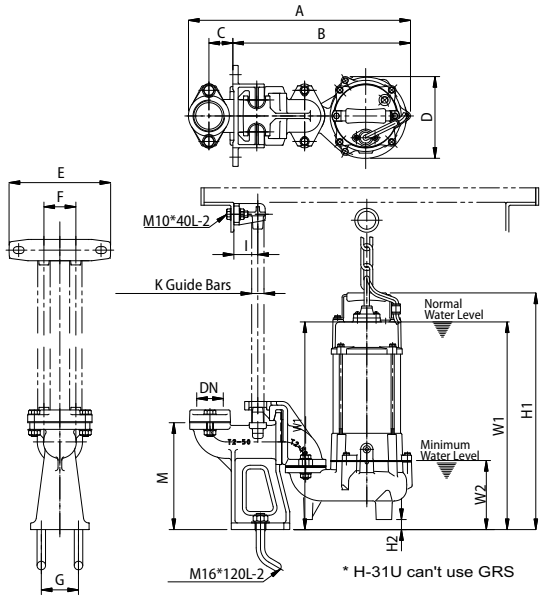

H-05U • H-21U : GRS T2-50

Model	Dimensions [mm]																
	DN	A	B	C	D	E	F	G	I	J	K	M	W1	W2	H1	H2	H3
H-05A	50	409	325	45	161	190	60	70	50	70	19	201	327	121	382	33	165
H-05U	50	418	334	45	154	190	155	60	50	70	19	201	391	128	445	19	165
H-21U	50	418	337	45	154	190	155	60	50	70	19	201	391	128	445	19	165

HN-22U • HN-32U • HN-33U • HN-35U

Specifications

Item		Description
Limits of use	Liquid Temp	0 - 40 °C
	Applications	General Waste water , Sewage and Industrial water
	Submersion Depth	100feet (30m)
Type	Frequency	50Hz
	Motor	2P • Dry motor
	Insulation	Class F
	Protection	IP68
	Protector	Auto cut
	Bearing	Ball type
	M.seal	Double M.seal
	Impeller	Semi-open
Material	Outer Cover	Cast Iron
	Motor Frame	SS304
	Main Shaft	SS403
	M.seal	Lower: Silicon/Silicon Upper: Carbon/Ceramic
	Casing	Cast Iron
	Impeller	Cast Iron
	Cable	VCT or H07RN-F or SJOW/SOW
Optional		Float Switch

HN-22U

HN-35U

U Type
Semi-open Impeller

Performance Curves

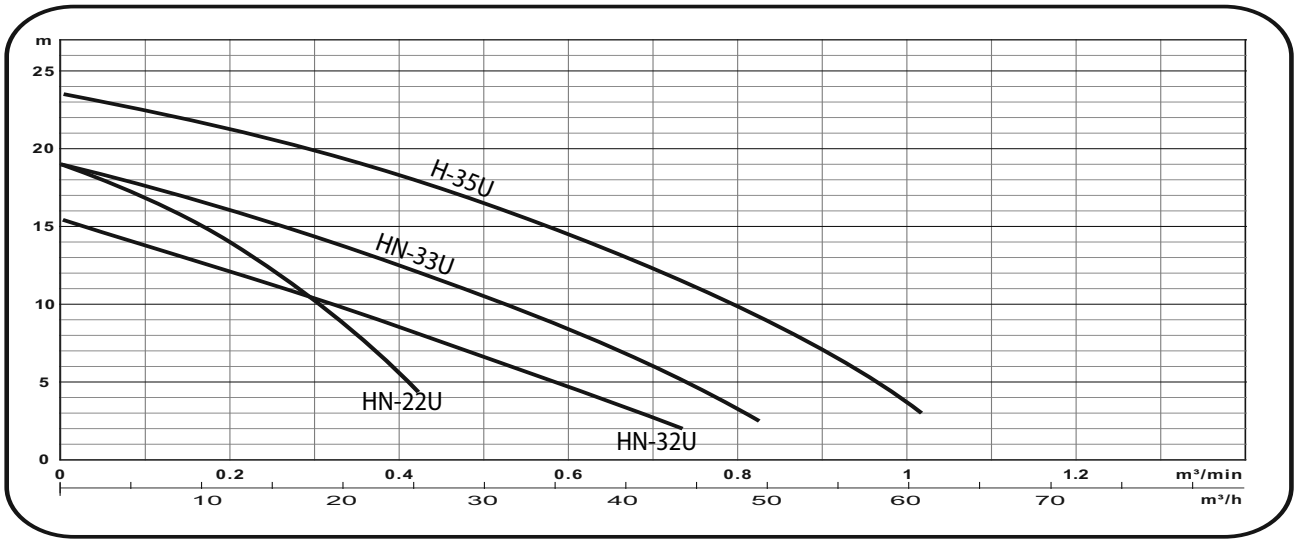

Model	Power HP (KW)	Discharge inch (mm)	Q:m³/min	0.1	0.2	0.3	0.4	0.5	0.6	0.8	1.0
			Q:m³/h	6	12	18	24	30	36	48	60
HN-22U	2 (1.5)	2" (50)	H (m)	16.5	14	11	6	--	--	--	--
HN-32U	2 (1.5)	3" (80)		14	12.5	10.5	8.5	6.5	4.5	--	--
HN-33U	3 (2.2)	3" (80)		17.5	16	14.5	12.5	10.5	8.5	3.5	--
HN-35U	5 (3.7)	3" (80)		24.5	23	21.5	20	17.5	15	9	3.8

Model	Power HP (KW)	Discharge inch (mm)	Standard m - m³/h	Max m - m³/h	Solid Passage	Weight (W/O Cable) 1ø - kg	Weight (W/O Cable) 3ø - kg	Phase Voltage	1ø 220V	1ø 230V	3ø 230V	3ø 380V	3ø 400V	3ø 415V	3ø 525V
HN-22U	2 (1.5)	2" (50)	14 - 12	19 - 27	35	30	25	Full Load Ampere	10.2	10	6.1	3.6	3.5	3.4	2.7
HN-32U	2 (1.5)	3" (80)	8.5 - 24	15.5 - 45	50	32	28		10.2	10	6.1	3.6	3.5	3.4	2.7
HN-33U	3 (2.2)	3" (80)	12.5 - 24	19 - 51	50	35	30		15	14.6	8.6	5.1	5	4.8	3.8
HN-35U	5 (3.7)	3" (80)	16.5 - 30	23.5 - 63	50	--	33		--	--	14.3	8.3	7.9	7.9	6.3

Dimensions

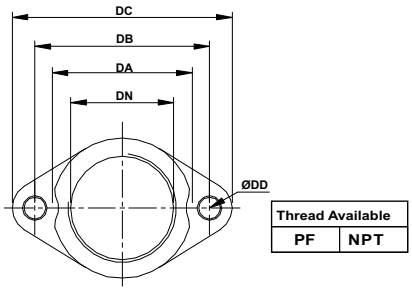

EF2-84 • EF2-96 • EF3-130

Nomenclature : EF 2 - 84
Flange Set / Discharge (inch-DN) / Pitch Circle Diameter (mm-DB)

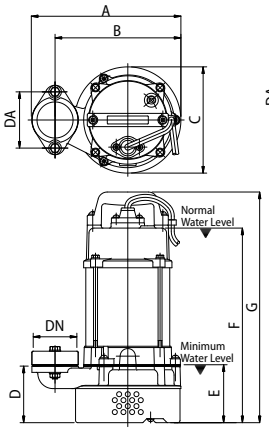

HN-22U

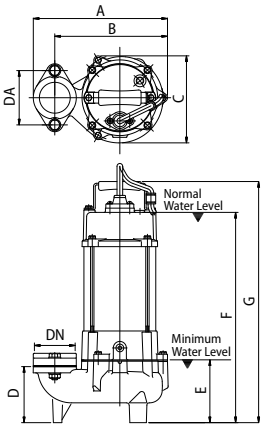

HN-32U • HN-33U

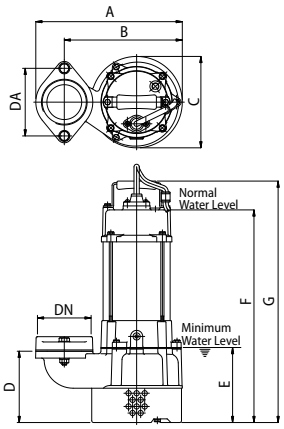

HN-35U

Elbow (flange) set	Application Model	Dimensions [mm]			
		DN	DB	DC	DD
EF2-96	HN-22U	50	96	121	12
EB3-130	HN-32U	80	130	155	12
EB3-130	HN-33U	80	130	155	12
EB3-150	HN-35U	80	150	185	15

Model	Dimensions [mm]								
	DN	DA	A	B	C	D	E	F	G
HN-22U	50	96	288	250	202	88	100	483	546
HN-32U	80	130	402	348	202	176	140	525	588
HN-33U	80	130	402	348	202	176	140	525	588
HN-35U	80	150	455	363	202	206	140	476	539

GRS (Guide Rail System) Dimensions

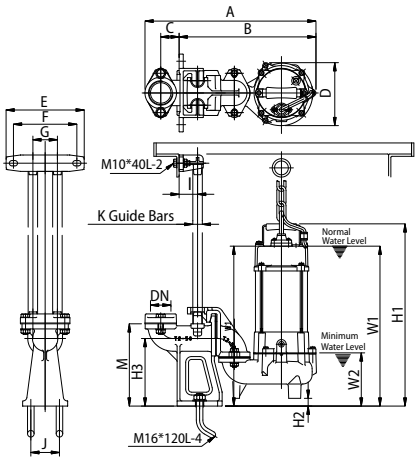

HN-22U : GRS T2-50

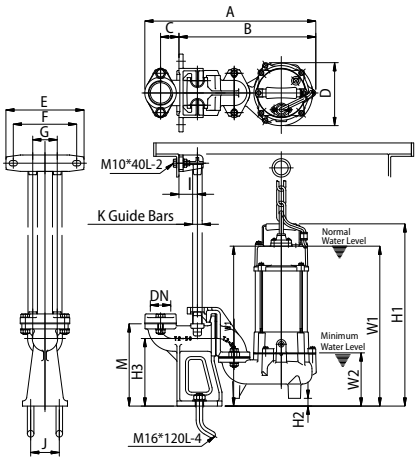

HN-32U • HN-33U : GRS T2-80

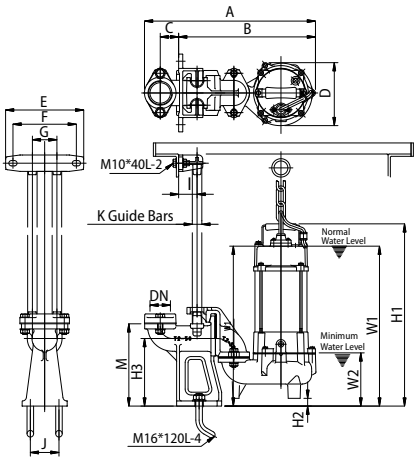

HN-35U : GRS T-80D

Model	Dimensions [mm]																
	DN	A	B	C	D	E	F	G	I	J	K	M	W1	W2	H1	H2	H3
HN-22U	50	468	385	45	202	190	155	60	45	70	3/4"	201	513	129	576	30	165
HN-32U	80	568	413	100	202	230	195	80	60	120	1 1/4"	235	624	240	685	99	180
HN-33U	80	568	413	100	202	230	195	80	60	120	1 1/4"	235	636	240	697	99	180
HN-35U	80	636	413	130	202	230	195	80	60	150	1 1/4"	280	575	240	638	99.0	180

H-05P • H-21P

Specifications

Item		Description
Limits of use	Liquid Temp	0 ~ 40 °C
	Applications	General Waste water , Sewage and Industrial water
	Submersion Depth	100feet (30m)
Type	Frequency	50Hz
	Motor	2P • Dry motor
	Insulation	Class B
	Protection	IP68
	Protector	Auto cut (H-05P 1Ø : Overheat)
	Bearing	Ball type
	M.seal	Double M.seal
	Impeller	Semi-open
Material	Outer Cover	Cast Iron
	Motor Frame	SS304
	Main Shaft	SS403 (½HP & 1HP : SS410)
	M.seal	Lower: Silicon/Silicon Upper: Carbon/Ceramic
	Casing	Cast Iron
	Impeller	Cast Iron
	Cable	VCT or H07RN-F or SJOW/SOW
Optional		Float switch

H-21PF

P Type
Semi-open Impeller

Performance Curves

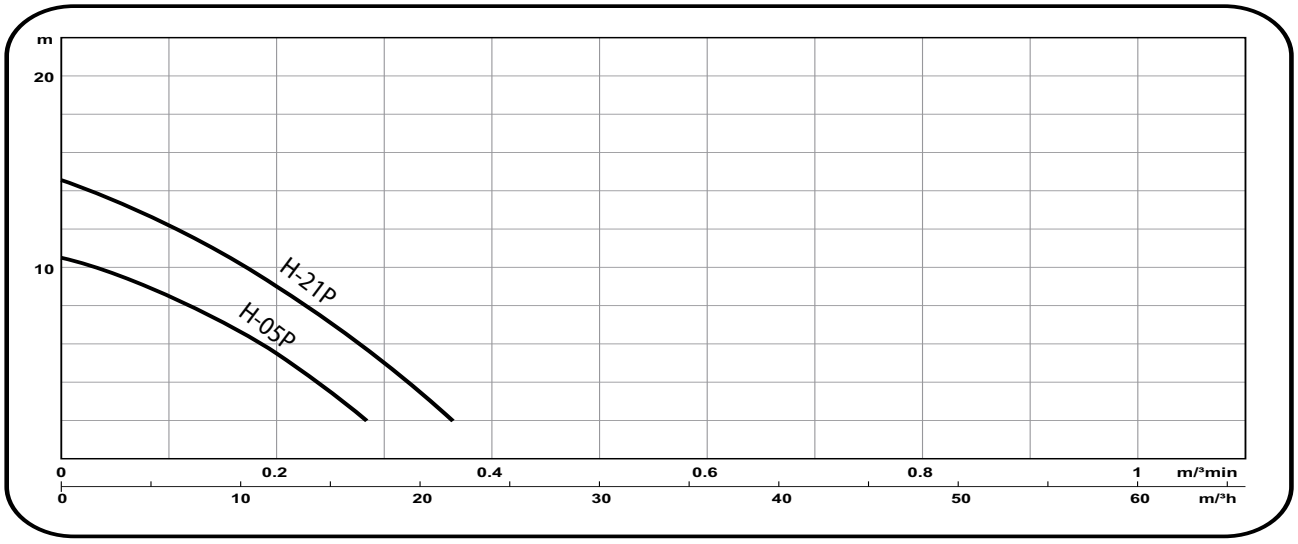

Model	Power KW	Discharge (mm)	Flow	10	20	30	40	50	60	Q:m³/min	0.1	0.2	0.3	0.4	0.5	0.6	0.8	1
										Q:m³/h	6	12	18	24	30	36	48	60
H-05P	0.4	2" (50)	Q: US:GPM	69	49	20	--	--	--	H (m)	9.5	5.5	0.3	--	--	--	--	--
H-21P	0.75	2" (50)		90	73	52	27	--	--		13.2	9	5	--	--	--	--	--

Model	Power KW	Discharge (mm)	Standard	Max	Solid passage mm	Weight (o/w cable)		Phase	1ø	1ø	1ø	3ø	3ø	3ø	3ø
			m-m³/h	m-m³/h		1ø kg	3ø kg	voltage	220V	230V	240V	230V	380V	400V	415V
H-05P	0.4	2" (50)	5.5-12	10.5-19.2	22	16	15	Full load Ampere	3.4	3.3	3.2	2.3	1.4	1.3	1.3
H-21P	0.75	2" (50)	9-12	14.5-24	26	18	17		5.4	5.2	5	3.3	2	1.9	1.8

Dimensions

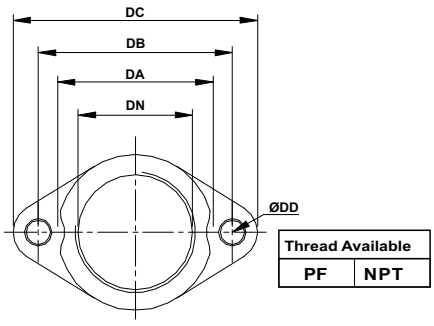

EF2-96 • EB3-130

Nomenclature : EB 3 - 130
Elbow Set / Discharge (inch-DN) / Outlet PCD (mm-DB)

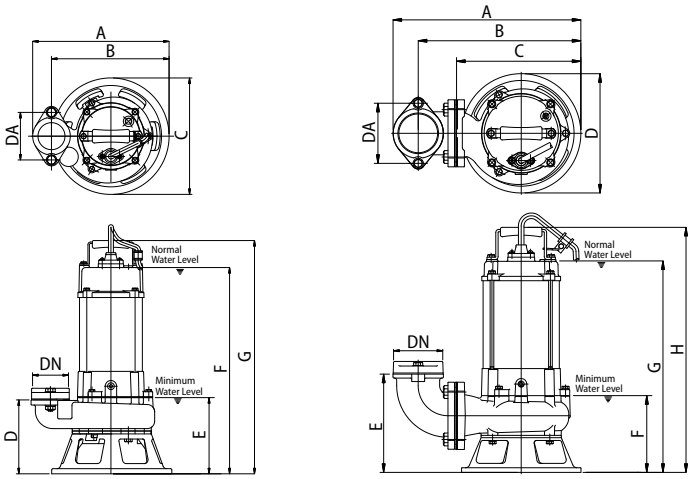

H-05P • H-21P

Elbow (Flange) set	Model Type	Dimension-mm					Holes
		DN	DA	DB	DC	DD	
EF2-96	H-05P	50	77	96	121	12	2
EF2-96	H-21P	50	77	96	121	12	2

Model	Dimension-mm									
	DN	A	B	C	D	E	F		G	
							1ø	3ø	1ø	3ø
H-05P	50	276	238	235	143	145	406		460	
H-21P	50	276	238	235	143	145	406		460	

GRS (Guide Rail System) Dimensions

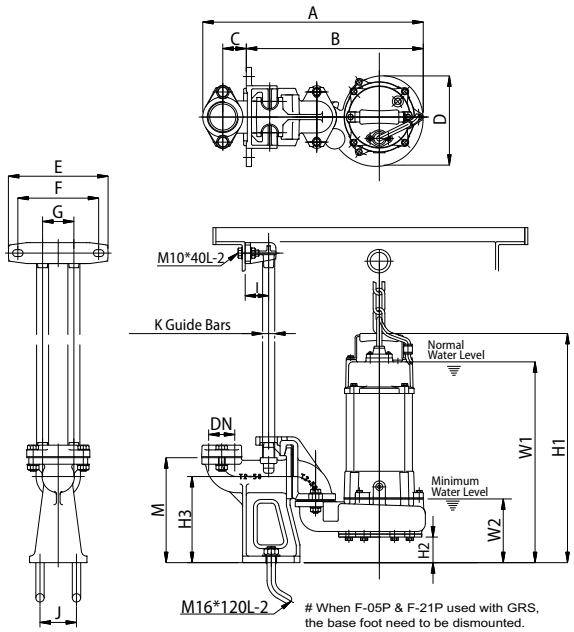

H-05P • H-21P : GRS T2-50

Model	Dimensions-mm																		
	DN	A	B	C	D	E	F	G	I	K	M	N	O	P	W1		W2	H1		H2
															1ø	3ø		1ø	3ø	
H-05P	50	425	341	145	173	190	60	70	50	19	201	--	--	--	381		110	435		53
H-21P	50	425	341	145	173	190	60	70	50	19	201	--	--	--	381		110	435		53

HN-32P • HN-33P • HN-35P

Specifications

Item		Description
Limits of use	Liquid Temp	0 - 40 °C
	Applications	General Waste water , Sewage and Industrial water
	Submersion Depth	100feet (30m)
Type	Frequency	50Hz
	Motor	2P • Dry motor
	Insulation	Class F
	Protection	IP68
	Protector	Auto cut
	Bearing	Ball type
	M.seal	Double M.seal
	Impeller	Semi-open
Material	Outer Cover	Cast Iron
	Motor Frame	SS304
	Main Shaft	SS403
	M.seal	Lower: Silicon/Silicon Upper: Carbon/Ceramic
	Casing	Cast Iron
	Impeller	Cast Iron
	Cable	VCT or H07RN-F or SJOW/SOW
Optional		Float Switch

HN-32PF

HN-35P

P Type
Semi-open Impeller

Performance Curves

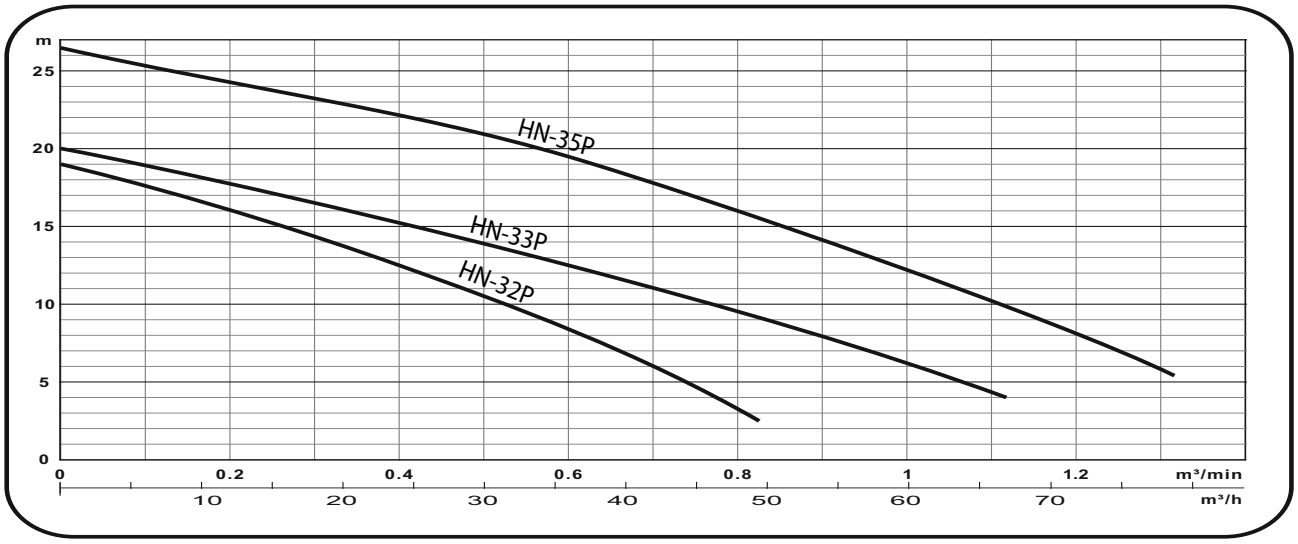

Model	Power HP (KW)	Discharge inch (mm)	Q:m³/min	0.1	0.2	0.3	0.4	0.5	0.6	0.8	1.0
			Q:m³/h	6	12	18	24	30	36	48	60
HN-32P	2 (1.5)	3" (80)	H (m)	14.5	13	12.5	11	10	8.5	5.5	--
HN-33P	3 (2.2)	3" (80)		18.5	17.5	16.5	15	14	12.5	9.5	6
HN-35P	5 (3.7)	3" (80)		22	20.5	19.3	18	16.5	14.6	9.5	12

Model	Power HP (KW)	Discharge inch (mm)	Standard m - m³/h	Max m - m³/h	Solid Passage	Weight (W/O Cable) 1ø - kg	Weight (W/O Cable) 3ø - kg	Phase Voltage	1ø 220V	1ø 230V	3ø 230V	3ø 380V	3ø 400V	3ø 415V	3ø 525V
HN-32P	2 (1.5)	3" (80)	8.5 - 36	15.5 - 63	35	34	30	Full Load Ampere	10.2	10	6.1	3.6	3.5	3.4	2.7
HN-33P	3 (2.2)	3" (80)	12.5 - 36	19 - 69	35	37	32		15	14.6	8.6	5.1	5	4.8	3.8
HN-35P	5 (3.7)	3" (80)	19 - 36	26.5 - 84	35	--	35		--	--	14.3	8.3	7.9	7.9	6.3

Dimensions

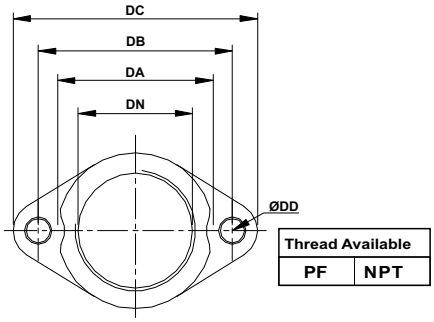

Thread Available	
PF	NPT

EF2-96 • EB3-130

Nomenclature : EB 3 - 130

Elbow Set — Discharge (inch-DN) — Outlet PCD (mm-DB)

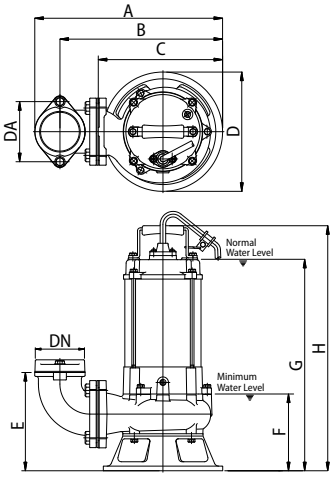

HN-32P • HN-33P

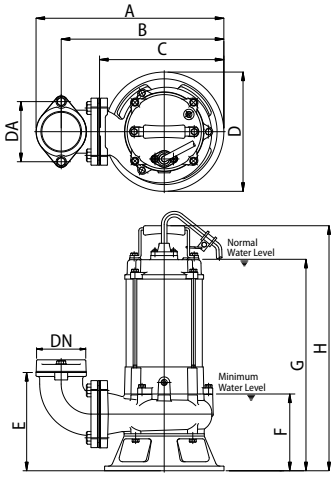

HN-35P

Elbow (flange) set	Application Model	Dimensions [mm]			
		DN	DB	DC	DD
EB3-130	HN-32P	80	130	155	12
EB3-130	HN-33P	80	130	155	12
EB3-150	HN-35P	80	150	185	15

Model	Dimensions [mm]								
	DN	A	B	C	D	E	F	G	H
HN-32P	80	417	363	275	260	218	163	527	590
HN-33P	80	417	363	275	260	218	163	539	602
HN-35P	80	470	378	275	260	248	163	478	541

GRS (Guide Rail System) Dimensions

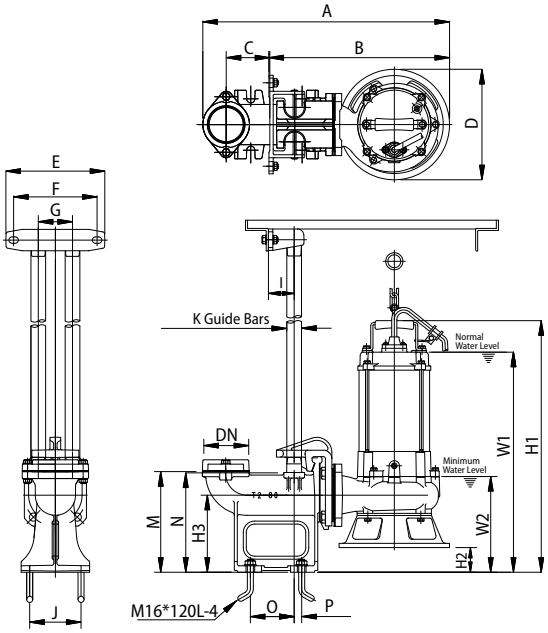

HN-32P • HN-33P : GRS T2-80

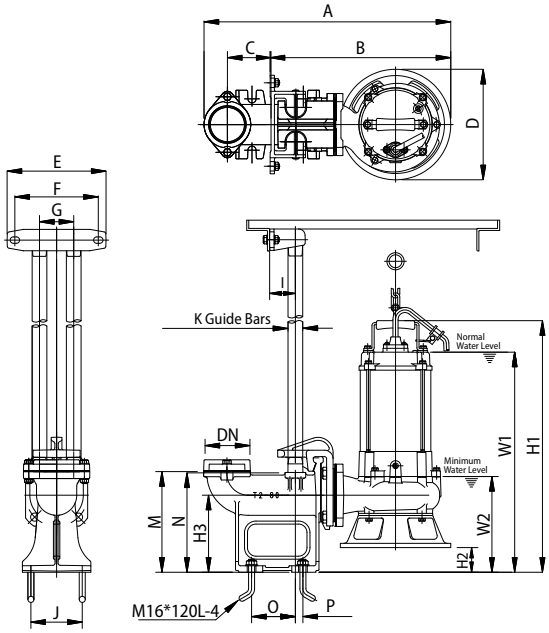

H-35P : GRS T-80D

Model	Dimensions [mm]																			
	DN	A	B	C	D	E	F	G	I	J	K	M	N	O	P	W1	W2	H1	H2	H3
HN-32P	80	583	428	100	260	230	195	80	60	120	1 1/4"	235	233	103	18	584	220	647	58	180
HN-33P	80	583	428	100	260	230	195	80	60	120	1 1/4"	235	233	103	18	596	220	659	58	180
HN-35P	80	650	428	130	260	230	195	80	60	150	1 1/4"	280	233	135	15	535	220	598	58	180

GP Series • Submersible Grinder Pumps

Power: 1.0 ~3.7 kW
Max. Head: 32 m
Max. Capacity: 19.8 m^3/h

Feature

- Durable heavy duty finned cast iron construction.
- Standard accessories include : epoxy resin cable base, dry motor, double mechanical seals, autocut protection, double ball bearing support shaft and rotor.
- Vortex impeller design prevents clogging by cutting up articles.
- Radial cutter and cutter ring : corrosion resistant material, hardened to 55-60 rockwell C.
- Model with float: **32GP** type : **1.3 & 2 & 3 HP.**

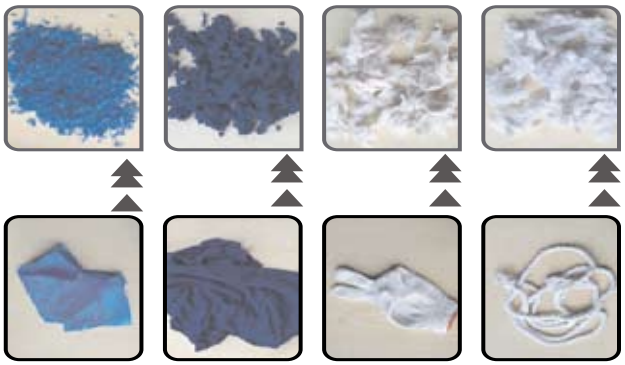

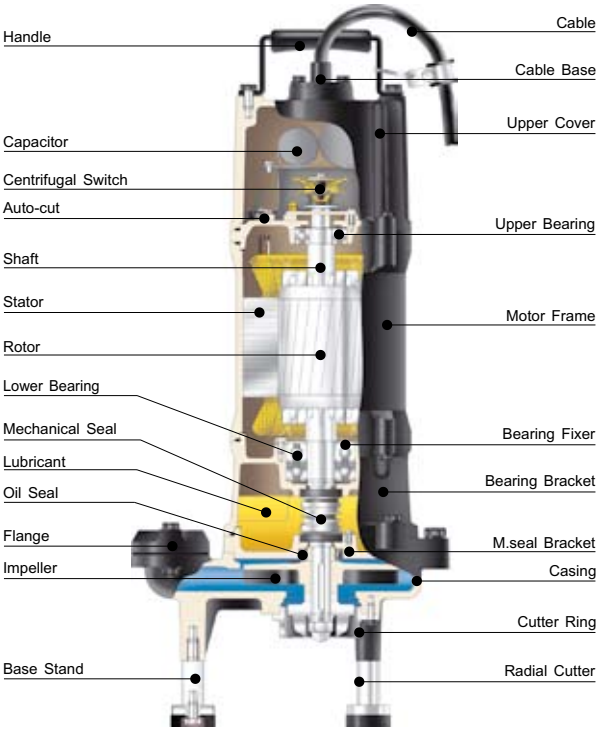

Applications

- Used in pressure sewage system.
- Drainage of wastewater from individual residences, apartment buildings, recreational developments, motels.
- Transferring wastewater of commercial buildings, industrial plants, and wastewater sampling, small hospitals.
- Schools, federal, state and local parks wastewater drainage.
- To transfer various wastewater and sewage.

Definition of model

32	GP	2	1.5	F
Discharge mm	Type	Pole	kW	Float

32GP 21.0 • 32GP21.5 • 32GP22.2 • 50GP22.2 • 50GP23.7

Specifications

Item		Description
Limits of use	Liquid Temp	0~40°C
	Applications	Residential Wastewater and sewage
	Submersion Depth	100feet (30m)
Type	Frequency	50Hz
	Motor	2P. Dry motor
	Insulation	Class B (2-5HP: Class F)
	Protection	IP 68
	Protector	Auto-cut
	Bearing	Ball Type
	M.seal	Double M. Seals
	Impeller	Semi-open
Material	Outer Cover	SS440C
	Motor Frame	SS440C
	Main Shaft	SS403
	M.seal	Lower: Silicon/Silicon Upper: Carbon /Ceramic
	Casing	Cast Iron
	Impeller	Cast Iron
	Cable	VCT or H-07RN-F or SJOW/SOW
Optional		Float switch (5HP: none)

32GP21

32GP21.5

50GP23.7

Semi-open Impeller

Semi-open Impeller

Radial Cutter & Cutter Ring

Performance Curves

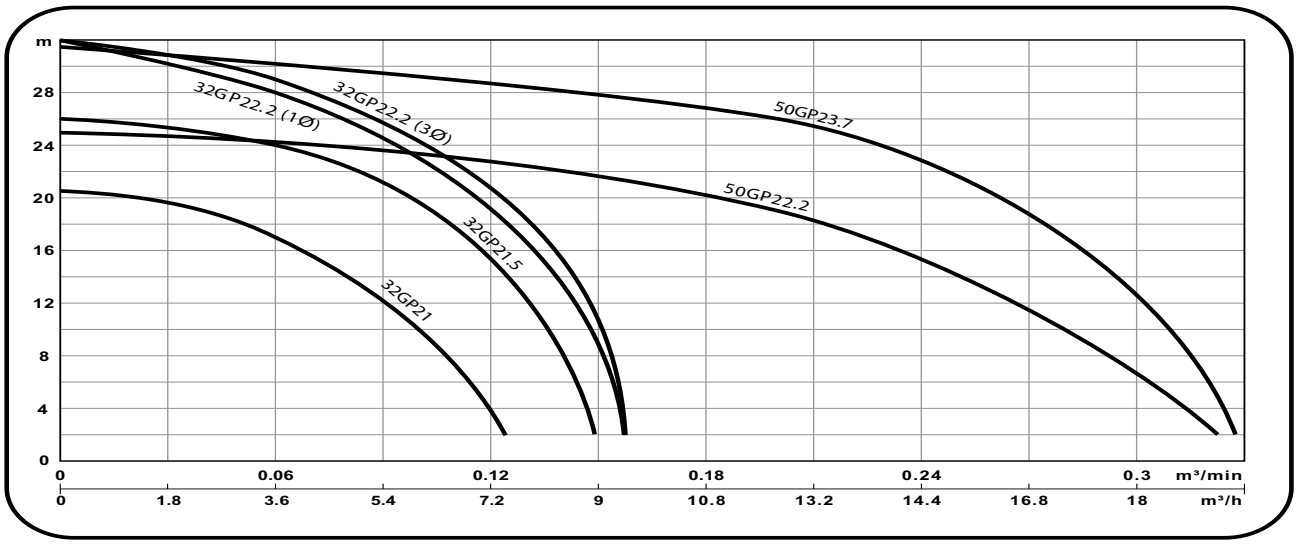

Model	Power HP (KW)	Discharge Inch (mm)	Q:m³/min	0.03	0.06	0.12	0.15	0.18	0.24	0.27	0.3
			Q:m³/h	1.8	3.6	7.2	9	10.8	14.4	16.2	18
32GP21.0	1⅓ (1.0)	1¼" (32)	H (m)	19.6	17	4	--	--	--	--	--
32GP21.5	2 (1.5)	1¼" (32)		25.3	24	15.3	--	--	--	--	--
32GP22.2 (1ø)	3 (2.2)	1¼" (32)		30.2	28	19.1	8.6	--	--	--	--
32GP22.2 (3ø)	3 (2.2)	1¼" (32)		30.9	29	20.7	10.7	--	--	--	--
50GP22.2	3(2.2)	2" (50)		24.6	24.3	22.7	21.6	20.2	19.3	11.5	6.6
50GP23.7	5 (3.7)	2" (50)		30.9	30.2	28.6	27.8	26.8	22.9	18.7	12.6

Model	Power HP (KW)	Discharge inch (mm)	Standard m - m³/h	Max m - m³/h	Solid Passage	Weight (W/O Cable) 1ø - kg	3ø - kg	Phase Voltage	1ø 220V	1ø 230V	1ø 240V	3ø 230V	3ø 380V	3ø 400V	3ø 415V
32GP21.0	1⅓ (1)	1¼" (32)	17-3.6	20.5-7.8	--	28	25	Full Load Ampere	6.6	6.4	6.4	4.1	2.4	2.4	2.3
32GP21.5	2 (1.5)	1¼" (32)	23-3.6	26-9	--	36	33		10.4	10	9.8	6.1	3.6	3.5	3.4
32GP22.2	3 (2.2)	1¼" (32)	28-3.6	32-9.9	--	38	35		15	14.6	14.4	8.6	5.1	5	4.8
50GP22.2	3(2.2)	2" (50)	19-12	25-19.8	--	--	51		--	--	--	9.5	5.6	5.5	5.2
50GP23.7	5 (3.7)	2" (50)	26-12	31.5-19.8	--	--	53		--	--	--	14	8.4	8.2	7.7

Dimensions

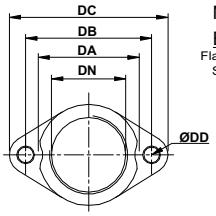

Nomenclature :

EF 1¼ - 84

Flange Set | Discharge (inch-DN) | Pitch Circle Diameter (mm-DB)

Thread Available	
PT (BSP.Tr.)	NPT

EF1¼-84

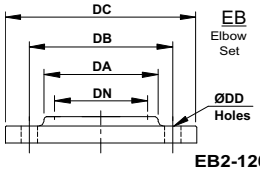

Nomenclature :

EB 2 - 120

Elbow Set | Discharge (inch-DN) | Outlet PCD (mm-DB)

Thread Available	
PT (BSP.Tr.)	NPT

EB2-120

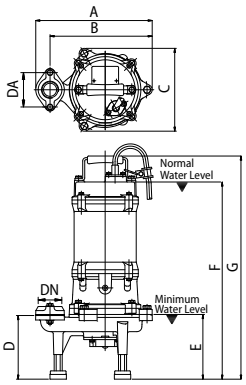

32GP21.0 • 32GP21.5
32GP22.2

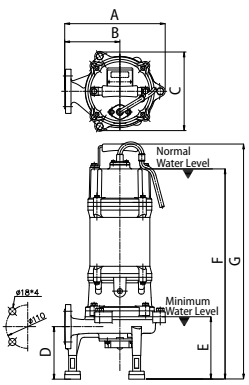

32GP21.5 DN40
32GP22.2 DN40

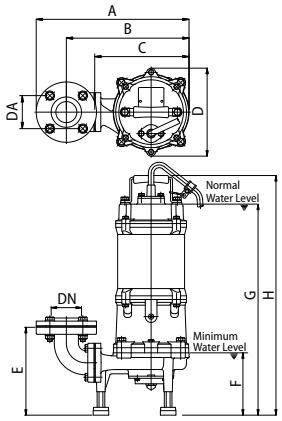

50GP22.2 • 50GP23.7

Elbow (flange) set	Application Model	Dimensions [mm]					Holes
		DN	DA	DB	DC	DD	
EF1¼ -84	32GP21.0	32	70	84	105	9.5	2
EF1¼ -84	32GP21.5	32	70	84	105	9.5	2
EF1¼ -84	32GP22.2	32	70	84	105	9.5	2
EB2-120	50GP22.2	50	78	120	155	15	4
EB2-120	50GP23.7	50	78	120	155	15	4

Model			Dimensions [mm]									
	DN	DA	A	B	C	D	E	F		G		H
								1ø	3ø	1ø	3ø	3ø
32GP21.0	32	84	249	214	177	156	160	498	473	555	530	--
32GP21.5	32	84	285	250	203	156	160	553	483	597	546	--
	40	--	255	140		133		533		596		
32GP22.2	32	84	285	250	203	156	160	566	483	630	546	--
	40	--	255	140		133						
50GP22.2	50	120	393	316	243	226	226	--	180	--	543	616
50GP23.7	50	120	393	316	243	226	226	--	180	--	543	616

GRS (Guide Rail System) Dimensions

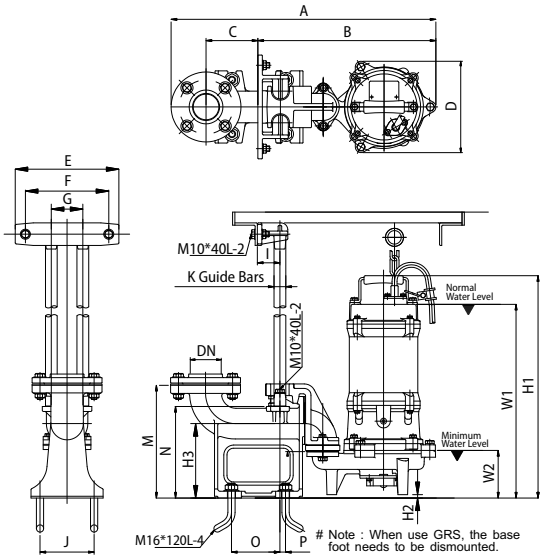

32GP21.0 • 32GP21.5 • 32GP22.2 : GRS T50C

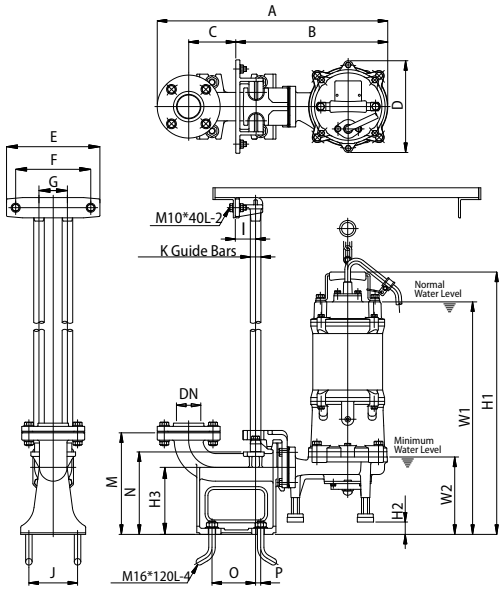

50GP22.2 • 50GP23.7: GRS T50F

Model	Dimensions [mm]																					
	DN	A	B	C	D	E	F	G	I	J	K	M	N	O	P	W1		W2	H1		H2	H3
																1ø	3ø		1ø	3ø		
32GP21.0	50	552	359	115	177	230	185	70	50	120	32	250	203	108	13	445	420	90	502	477	6	165
32GP21.5	50	588	395	115	203	230	185	70	50	120	32	250	203	108	13	480	430	106	544	493	6	165
32GP22.2	50	588	395	115	203	230	185	70	50	120	32	250	203	108	13	513	430	106	577	493	6	165
50GP22.2	50	569	375	116	226	230	185	70	50	120	32	250	203	108	13	--	575	193	--	648	33	165
50GP23.7	50	569	375	116	226	230	185	70	50	120	32	250	203	108	13	--	575	193	--	648	33	165

32GP21.5H

Specifications

Item		Description
Limits of use	Liquid Temp	0~40°C
	Applications	Residential Wastewater and sewage
	Submersion Depth	100feet (30m)
Type	Frequency	50Hz
	Motor	2P. Dry motor
	Insulation	Class B (2-5HP: Class F)
	Protection	IP 68
	Protector	Auto-cut
	Bearing	Ball Type
	M.seal	Double M. Seals
	Impeller	Semi-open
Material	Outer Cover	SS440C
	Motor Frame	SS440C
	Main Shaft	SS403
	M.seal	Lower: Silicon/Silicon Upper: Carbon /Ceramic
	Casing	Cast Iron
	Impeller	Cast Iron
	Cable	VCT or H-07RN-F or SJOW/SOW
Optional		Float switch (5HP: none)

32GP21.5H

Semi-open Impeller

Radial Cutter & Cutter Ring

Performance Curves

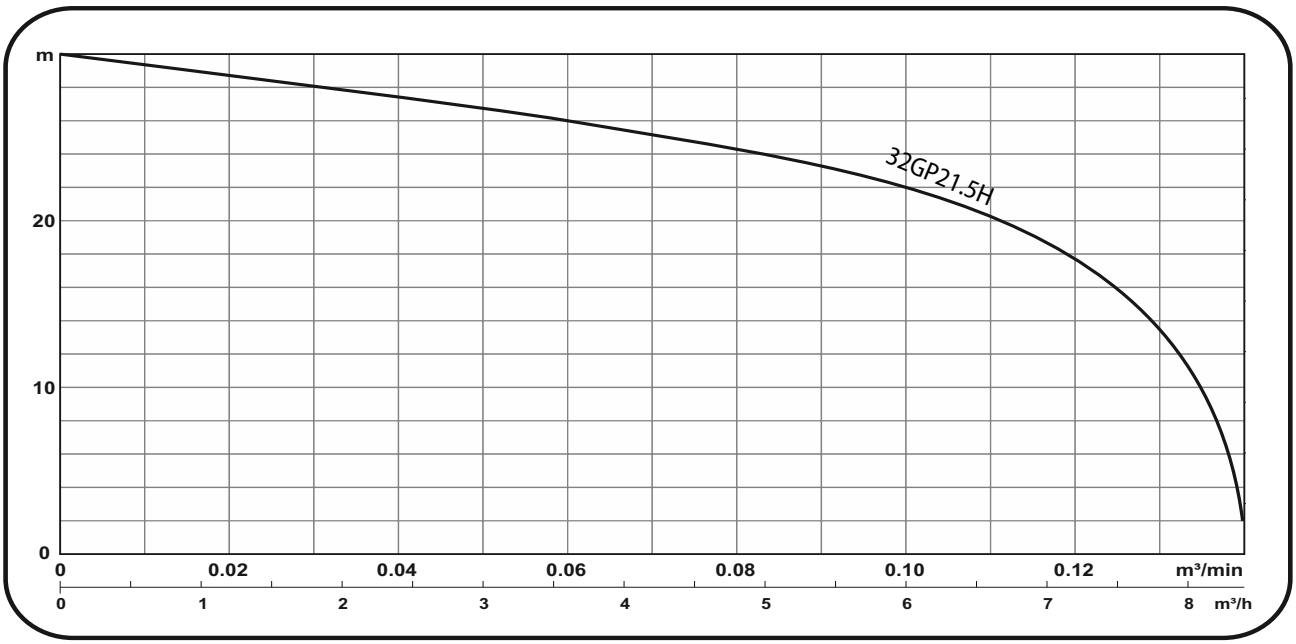

Model	Power HP (kW)	Discharge Inch (mm)	Q:m³/min	0.02	0.04	0.06	0.08	0.1	1.12	1.1	1.14
			Q:m³/h	1.2	2.4	3.6	4.8	6.0	7.2	7.8	8.4
32GP21.5H	2 (1.5)	1¼" (32)	H (m)	28.7	27.4	26.0	24.2	22.0	17.7	13.4	--

Model	Power HP (kW)	Discharge inch (mm)	Standard	Max	Solid Passage mm	Weight (W/O Cable)		Phase	1ø	3ø	3ø	3ø	3ø	3ø	3ø
			m - m³/h	m - m³/h		1ø - kg	3ø - kg	Voltage	220V	220V	230V	380V	440V	460V	525V
32GP21.5H	2 (1.5)	1¼" (32)	26.5-3.6	30-8.4		36	32	Full Load Ampere	10.4	6.2	6.1	3.6	3.1	3.1	2.7

Dimensions

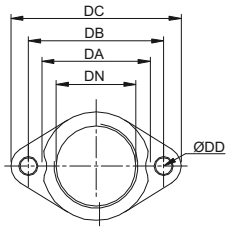

Thread Available	
PT (BSP.Tr.)	NPT

EF1¼-84

Nomenclature : EF 1¼ - 84
Flange Set / Discharge (inch-DN) / Pitch Circle Diameter (mm-DB)

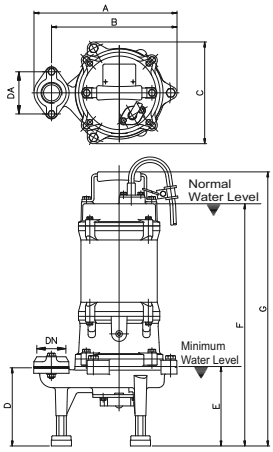

32GP21.5H

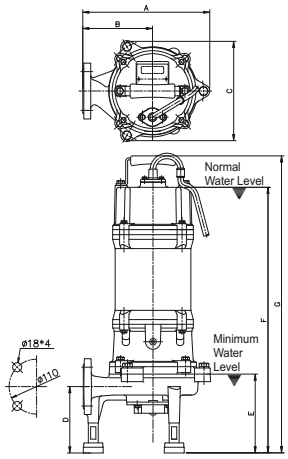

32GP21.5H DN40

Elbow (flange) set	Application Model	Dimensions [mm]					Holes
		DN	DA	DB	DC	DD	
EF1¼-80	32GP21.5H	32	70	84	105	9.5	2

Model			Dimensions [mm]								
	DN	DA	A	B	C	D	E	F		G	
								1ø	3ø	1ø	3ø
32GP21.5H	32	84	285	250	203	156	160	553	483	597	546
32GP21.5H DN40	--	--	255	140	203	133	160	533	483	596	546

GRS (Guid Rail System) Dimensions

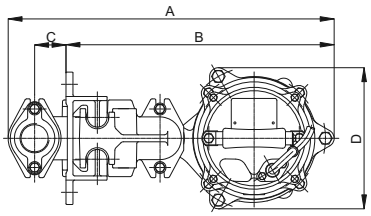

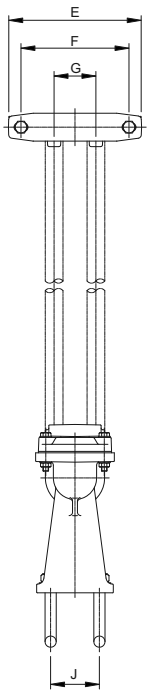

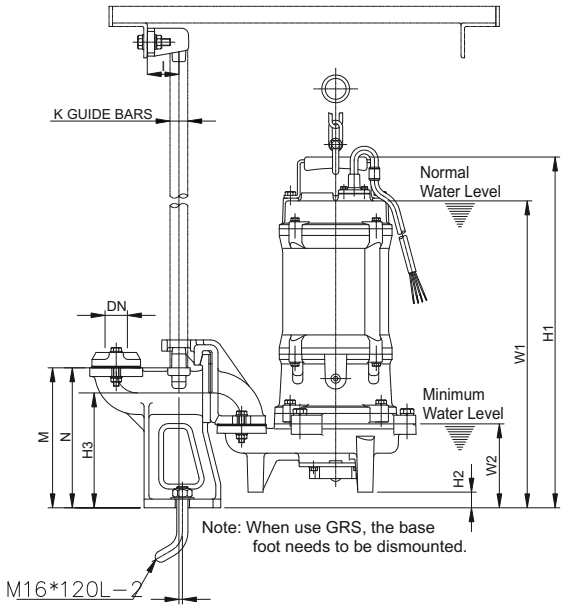

32GP21.5H : GRS

Model	Dimensions [mm]																				
	DN	A	B	C	D	E	F	G	I	J	K	M	N	O	P	W1		W2	H1		H2	H3
																1ø	3ø		1ø	3ø		
32GP21.5H	32	468	385	45	203	190	155	60	45	70	25	201	201	--	5	495	440	120	558	503	22	165

SG Series • Stainless Steel Submersible Pumps

Power: 0.4 ~3.7 kW
Max. Head: 21 m
Max. Capacity: 66 m^3/h

Feature

- Best structure design, dry motor, double mechanical seals, equipped Auto-cut protector, pumps casting, out cover adopt stainless steel material, acidresting Silicon carbide seals.
- SG and SW series is suitable for all, light acid, corrosive and / or sea water application.
- Precision casting method produces the highest quality with a smooth surface finish.

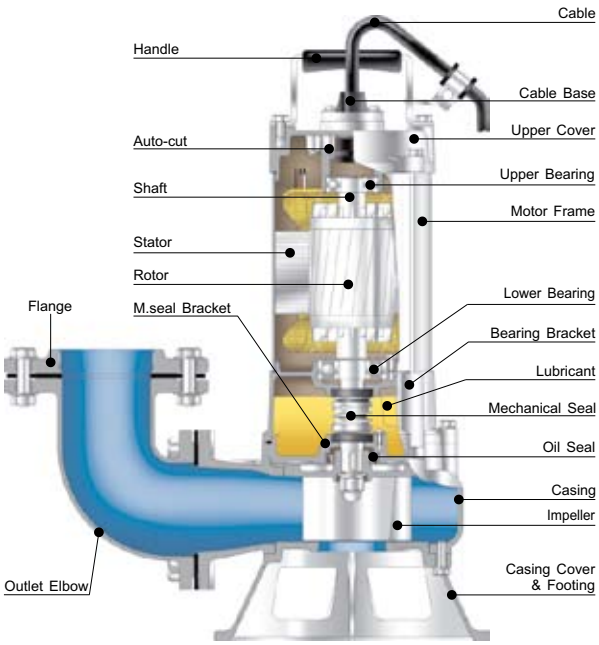

Applications

- Water drainage for industries.
- Sanitary sewer, single and multifamilies drainage.
- Water drainage for chemical, pharmaceutical and metal processing factory.

Viton O-Ring

Viton O-ring are used throughout the pump to give better pump life in corrosive acid and aggressive media

Definition of model

S	W	2	1	A	F
Stainless Type	Strainer	Discharge Inch	HP	Style	Float
S	G	05	A	U	F
Stainless Type	Footing	½ HP	Style	Impeller Type	Float
S	G	3	2	P	
Stainless Type	Strainer	Discharge Inch	HP	Impeller Type	

50SGU2.4A • 50SGU2.8A

Specifications

Item		Description
Limits of use	Liquid Temp	0~40°C
	Applications	Corrosive / Food processing Liquids
	Submersion Depth	100feet (30m)
Type	Frequency	50Hz
	Motor	2P. Dry motor
	Insulation	Class B
	Protection	IP 68
	Protector	Auto-cut (0.5HP 1ϕ: thermal)
	Bearing	Ball Type
	M.seal	Double M. Seals
	Impeller	Vortex
Material	Outer Cover	SCS14
	Motor Frame	SS316
	Main Shaft	SS316
	M.seal	Lower: Silicon/Silicon Upper: Carbon /Ceramic
	Casing	SCS14
	Impeller	SCS14
	Cable	VCT or H-07RN-F or SJOW/SOW
Optional		

50SGU2.4A • 50SGU2.8A

U Type
Semi-open Impeller

Performance Curves

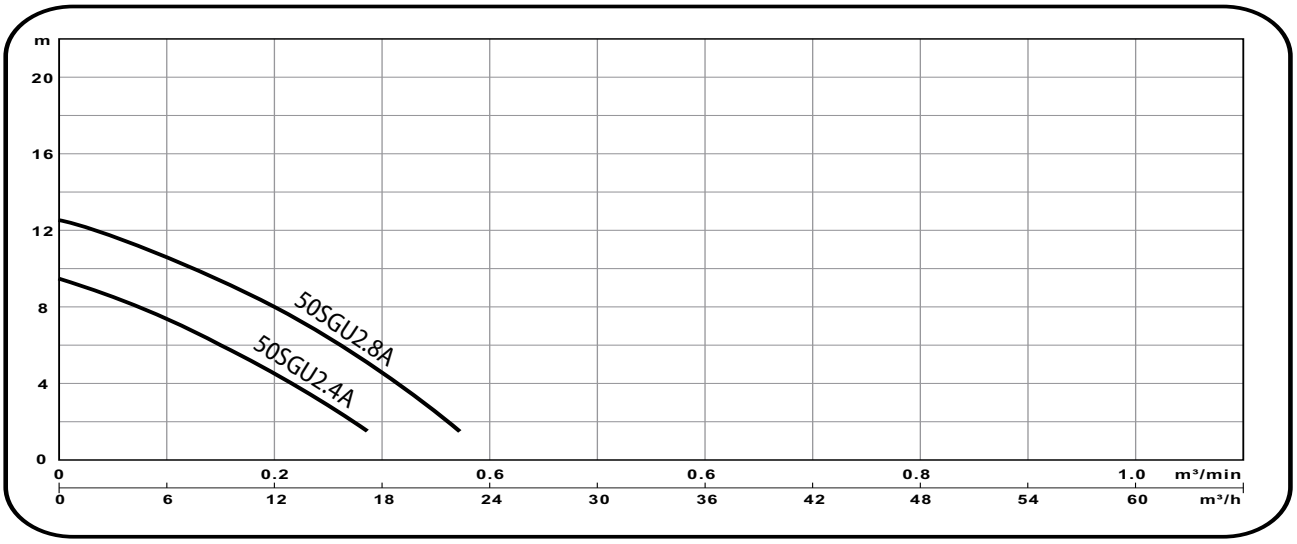

Model	Power HP (KW)	Discharge inch (mm)	Q:m³/min	0.1	0.2	0.3	0.4	0.5	0.6	0.8	1.0
			Q:m³/h	6	12	18	24	30	36	48	60
50SGU2.4A	½ (0.4)	2" (50)	H (m)	7.4	4.5	1	--	--	--	--	--
50SGU2.8A	1 (0.75)	2" (50)		10.6	8	4.5	--	--	--	--	--

Model	Power HP (KW)	Discharge inch (mm)	Standard m - m³/h	Max m - m³/h	Solid Passage mm	Weight (W/O Cable) 1ø - kg	3ø - kg	Phase	1ø	1ø	1ø	3ø	3ø	3ø	3ø
								Voltage	220V	230V	240V	230V	380V	400V	415V
50SGU2.4A	½ (0.4)	2" (50)	6-9	9.5-19.2	35	15	14	Full Load Ampere	3.4	3.3	3.2	2.3	1.4	1.3	1.3
50SGU2.8A	1 (0.75)	2" (50)	8-12	12.5-24	35	16	15		5.4	5.2	5	3.3	2	1.9	1.8

Dimensions

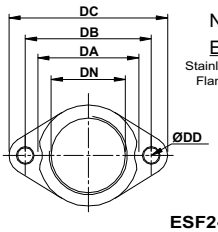

Nomenclature :

ESF 2 - 96

Stainless Steel Flange Set | Discharge (inch-DN) | Pitch Circle Diameter(mm-DB)

Thread Available	
PF	NPT

ESF2-96

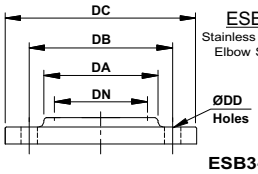

Nomenclature :

ESB 3 - 150

Stainless Steel Elbow Set | Discharge (inch-DN) | Outlet PCD (mm-DB)

Thread Available	
PT (BSP.Tr.)	NPT

ESB3-150

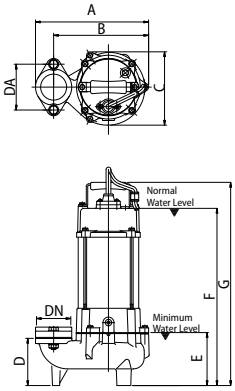

50SGU2.4A • 50SGU2.8A

Elbow (flange) set	Application Model	Dimensions [mm]					Holes
		DN	DA	DB	DC	DD	
EF2-96	50SGU2.4A	50	77	96	121	12	2
EF2-96	50SGU2.8A	50	77	96	121	12	2

Model	Dimensions [mm]									
	DN	DA	A	B	C	D	E	F	G	H
50SGU2.4A	50	96	237	199	154	99	109	372	427	--
50SGU2.8A	50	96	237	199	154	99	109	372	427	--

GRS (Guide Rail System) Dimensions

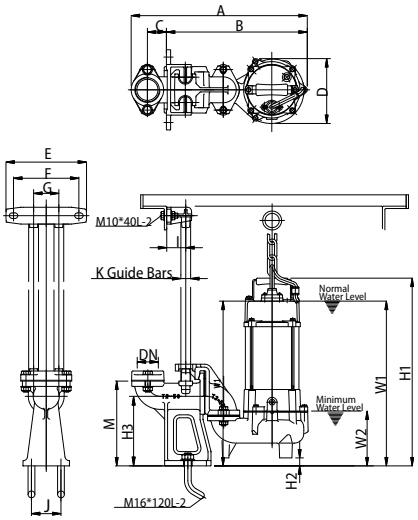

50SGU2.4A • 50SGU2.8A : GRS ST2-50

Model	Dimensions [mm]																			
	DN	A	B	C	D	E	F	G	I	J	K	M	N	O	P	W1	W2	H1	H2	H3
50SGU2.4A	50	418	334	45	154	190	155	60	50	70	19	201	--	--	--	391	128	445	19	165
50SGU2.8A	50	418	334	45	154	190	155	60	50	70	19	201	--	--	--	391	128	445	19	165

80SGP21.5 • 80SGP22.2 • 80SGP23.7

Specifications

Item		Description
Limits of use	Liquid Temp	0~40°C
	Applications	Corrosive / Food processing liquids
	Submersion Depth	100feet (30m)
Type	Frequency	50Hz
	Motor	2P • Dry motor
	Insulation	Class F
	Protection	IP68
	Protector	Auto cut
	Bearing	Ball type
	M.seal	Double M.seal
	Impeller	Open
Material	Upper Cover	SCS14
	Motor Frame	SS316
	Main Shaft	SS316
	M.seal	Lower: Silicon/Silicon Upper: Carbon/Ceramic
	Casing	SCS14
	Impeller	SCS14
	Cable	VCT or H07RN-F or SOW
Optional		

80 SGP 21.5• 80SGP22.2 • 80SGP23.7

Performance Curves

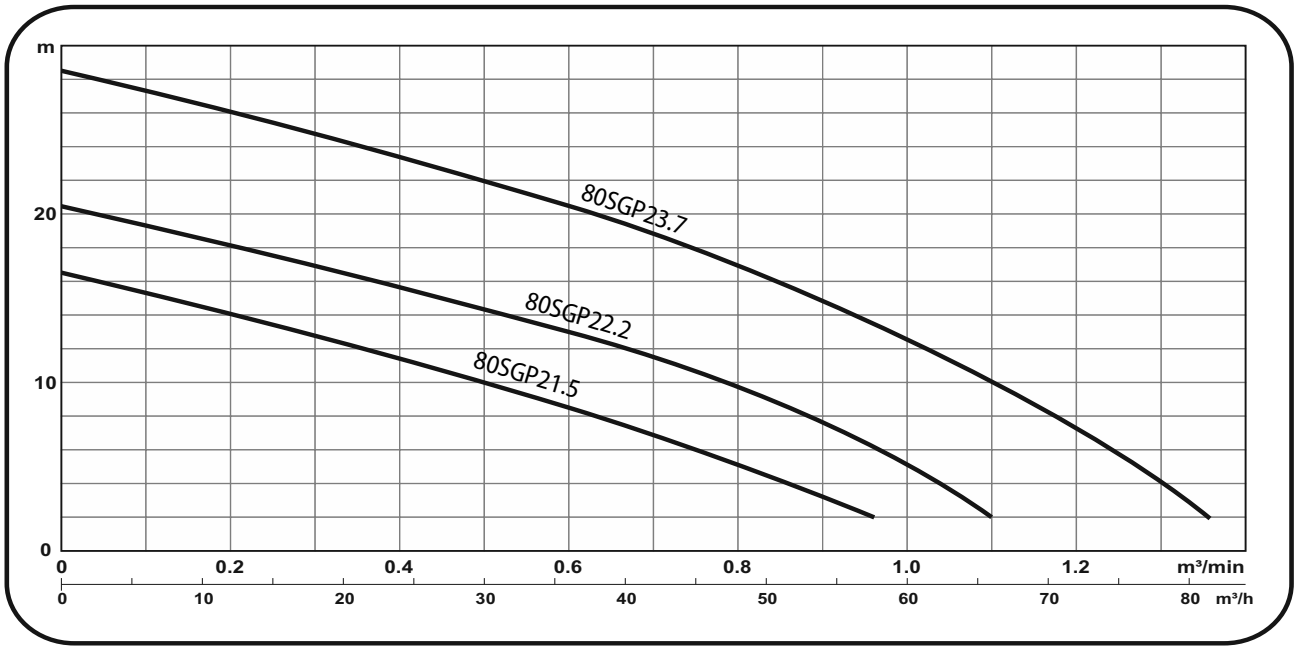

Model	Power HP (kW)	Discharge Inch (mm)	Q:m³/min	0.2	0.4	0.6	0.8	1	1.1	1.2	1.3
			Q:m³/h	12	24	36	48	60	66	72	78
80SGP21.5	2 (1.5)	3" (80)	H (m)	14.1	11.4	8.5	5.1	1.0	--	--	--
80SGP22.2	3 (2.2)	3" (80)		18.1	15.4	13	9.7	5.1	2.0	--	--
80SGP23.7	5 (3.7)	3" (80)		26.0	23.4	20.5	16.9	13	10.0	7.3	4

Model	Power HP (kW)	Discharge inch (mm)	Standard m - m³/h	Max m - m³/h	Solid Passage mm	Weight (W/O Cable) 1ø - kg	3ø - kg	Phase Voltage	1ø 220V	1ø 230V	3ø 230V	3ø 380V	3ø 400V	3ø 415V	3ø 525V
80SGP21.5	2 (1.5)	3" (80)	8.5-36	16.5-63	35	32.5	28.5	Full Load Ampere	10.2	10.0	6.1	3.6	3.4	3.4	2.7
80SGP22.2	3 (2.2)	3" (80)	13-36	20.5-69	35	36.5	31.5		15.0	14.6	8.6	5.1	5.0	4.8	3.8
80SGP23.7	5 (3.7)	3" (80)	20.5-36	28.5-84	32	--	43		--	--	14.0	8.2	7.8	7.7	6.2

Dimensions

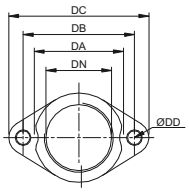

Nomenclature :

ESB 3 - 130

Elbow Set | Discharge (inch-DN) | Outlet PCD (mm-DB)

Thread Available	
PF	NPT

ESB3-130

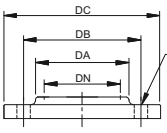

Thread Available	
PT (BSP.Tr.)	NPT

ESB3-150

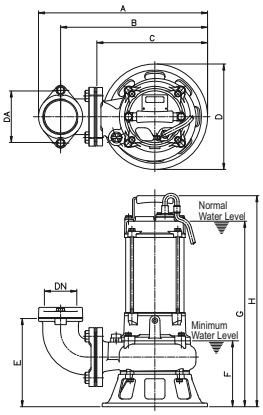

80SGP21.5 • 80SGP22.2

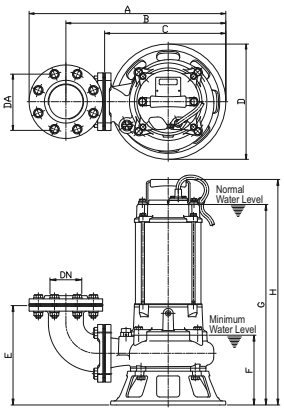

80SGP23.7

Elbow (flange) set	Application Model	Dimensions [mm]					Holes
		DN	DA	DB	DC	DD	
ESB3-130	80SGP21.5	80	110	130	155	12	2
ESB3-130	80SGP22.2	80	110	130	155	12	2
ESB3-150	80SGP23.7	80	110	150	185	15	8

Model	Dimensions [mm]									
	DN	DA	A	B	C	D	E	F	G	H
80SGP21.5	80	130	417	363	275	260	218	163	458	521
80SGP22.2	80	130	417	363	275	260	218	163	458	521
80SGP23.7	80	150	495	403	305	290	250	176	505	568

GRS (Guid Rail System) Dimensions

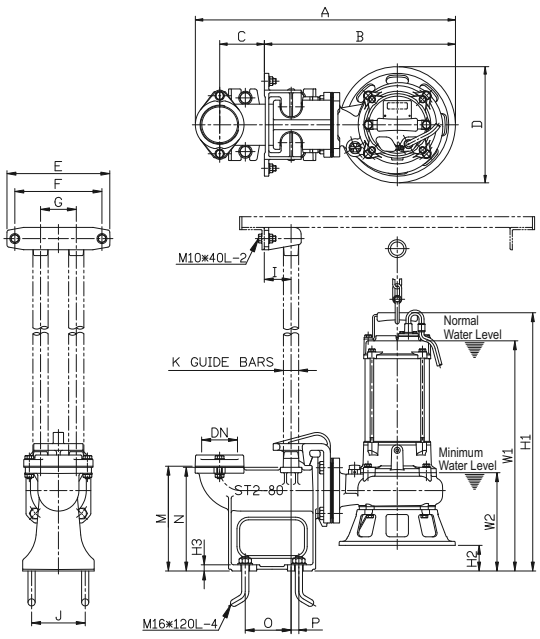

80SGP21.5 • 80SGP22.2 : GRS ST2-80

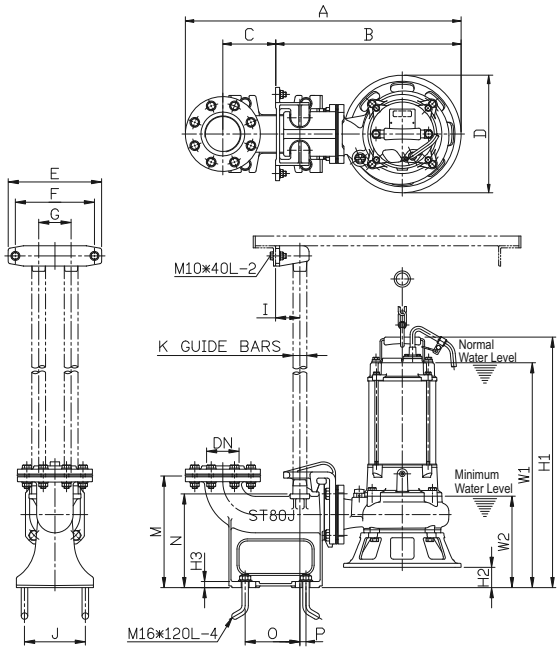

80SGP23.7 : GRS ST80J

Model	Dimensions [mm]																			
	DN	A	B	C	D	E	F	G	I	J	K	M	N	O	P	W1	W2	H1	H2	H3
80SGP21.5	80	583	428	100	260	230	195	80	60	120	32	235	232	103	18	515	220	578	58	14
80SGP22.2	80	583	428	100	260	230	195	80	60	120	32	235	232	103	18	515	220	578	58	14
80SGP23.7	80	681	458	130	290	230	195	80	60	150	32	275	231	135	15	555	226	618	50	15

80SGP25.5 • 80SGP27.5 • 80SGP211

Specifications

Item		Description
Limits of use	Liquid Temp	0~40°C
	Applications	Corrosive / Food processing liquids
	Submersion Depth	100feet (30m)
Type	Frequency	50Hz
	Motor	2P • Dry motor
	Insulation	Class H
	Protection	IP68
	Protector	Auto cut(7.5-10HP). MTS&MS (15HP)
	Bearing	Ball type
	M.seal	Double M.seal
	Impeller	Open
Material	Upper Cover	SCS14
	Motor Frame	SS316
	Main Shaft	SS316(7.5-10HP). SS630(15HP)
	M.seal	Lower: Silicon/Silicon Upper: Carbon/Ceramic
	Casing	SCS14
	Impeller	SCS14
	Cable	VCT or H07RN-F or SOW
Optional		

Performance Curves

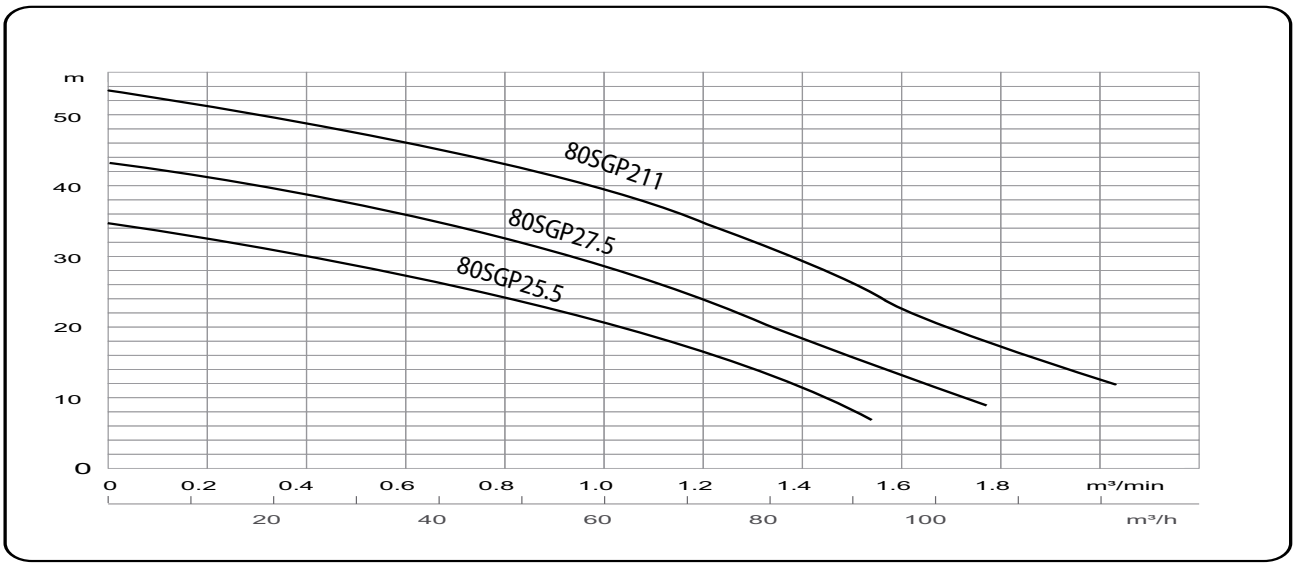

Model	Power HP (kW)	Discharge inch (mm)	Q:m³/min	0.2	0.4	0.6	0.8	1	1.2	1.6	2
			Q:m³/h	12	24	36	48	60	72	96	120
80SGP 25.5	7.5 (5.5)	3" (80)	H (m)	33.0	30.6	27.8	24.6	20.8	16.4	--	--
80SGP27.5	10 (7.5)	3" (80)		40.4	38.4	36	32.4	28.4	23.9	13.8	--
80SGP211	15 (11)	3" (80)		52.5	48.9	46.2	42.8	39.2	35	23.2	12.7

Model	Power HP (kW)	Discharge inch (mm)	Standard	Max	Solid Passage mm	Weight (W/O Cable)		Phase	1ø	1ø	3ø	3ø	3ø	3ø	3ø
			m - m³/h	m - m³/h		1ø - kg	3ø - kg	Voltage	220V	230V	230V	380V	400V	415V	525V
80 SGP 25.5	7.5 (5.5)	3" (80)	28-36	35-96	30.0	--	67	Full Load Ampere	--	--	20.2	11.7	11.3	11.2	8.8
80 SGP 27.5	10 (7.5)	3" (80)	35.5-36	43-108	30.0	--	73.0		--	--	26.0	15.3	14.5	14.4	11.4
80 SGP 211	15 (11)	3" (80)	46-36	54-123	30.0	--	82.0		--	--	39.0	22.2	21.6	21.6	17.1

Dimensions

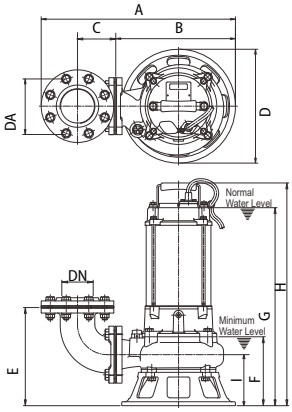

80SGP25.5 • 80SGP27.5 • 80SGP211

Elbow (flange) set	Application Model	Dimensions [mm]				Holes
		DN	DB	DC	DD	
ESB3-150K	80SGP25.5	80	150	185	15	8
ESB3-150K	80SGP27.5	80	150	185	15	8
ESB3-150K	80SGP211	80	150	185	15	8

Model	Dimensions [mm]									
	DN	A	B	C	D	E	F	G	H	I
80SGP25.5	80	563	373	98	345	271	198	585	684	151
80SGP27.5	80	563	373	98	345	271	198	585	684	151
80SGP211	80	563	373	98	345	271	198	625	724	151

GRS (Guid Rail System) Dimensions

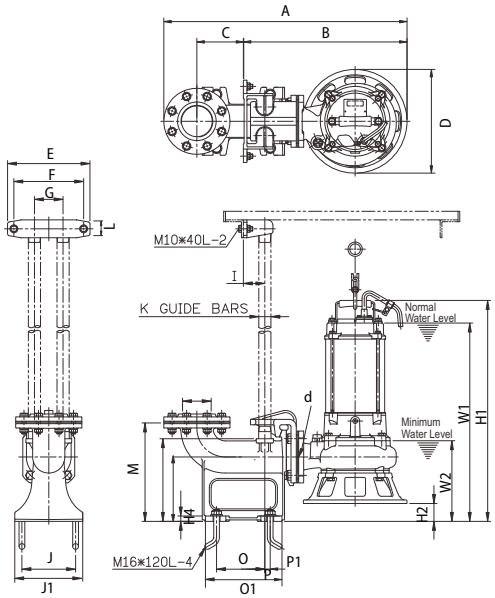

80SGP25.5 • 80SGP27.5 80SGP211 : GRS TST-80DH

Model	Dimensions [mm]																							
	DN	A	B	C	D	E	F	G	I	J	J1	K	L	M	N	O	O1	P	P1	W1	W2	H1	H2	H3	H4
80SGP25.5	80	832	609	130	345	230	195	80	60	150	190	32	50	275	231	135	230	15	40	615	228	714	30	180	15
80SGP27.5	80	832	609	130	345	230	195	80	60	150	190	32	50	275	231	135	230	15	40	615	228	714	30	180	15
80SGP211	80	832	609	130	345	230	195	80	60	150	190	32	50	275	231	135	230	15	40	655	228	754	30	180	15

100SGP25.5 • 100SGP27.5 • 100SGP211

Specifications

Item		Description
Limits of use	Liquid Temp	0~40°C
	Applications	Corrosive / Food processing liquids
	Submersion Depth	100feet (30m)
Type	Frequency	50Hz
	Motor	2P • Dry motor
	Insulation	Class H
	Protection	IP68
	Protector	Auto cut(7.5-10HP). MTS&MS (15HP)
	Bearing	Ball type
	M.seal	Double M.seal
	Impeller	Vortex
Material	Upper Cover	SCS14
	Motor Frame	SS316
	Main Shaft	SS316(7.5-10HP). SS630(15HP)
	M.seal	Lower: Silicon/Silicon Upper: Carbon/Ceramic
	Casing	SCS14
	Impeller	SCS14
	Cable	VCT or H07RN-F or SOW
Optional		

Performance Curves

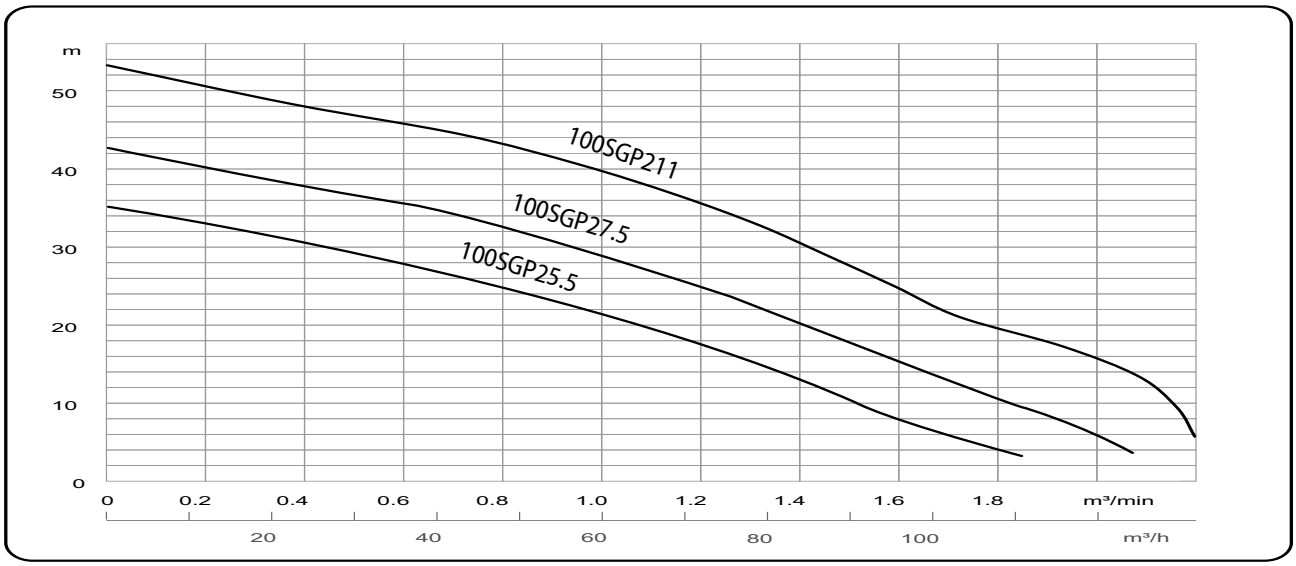

Model	Power HP (kW)	Discharge inch (mm)	Q:m³/min	0.2	0.4	0.6	0.8	1	1.2	1.6	2
			Q:m³/h	12	24	36	48	60	72	96	120
100SGP 25.5	7.5 (5.5)	4" (100)	H (m)	33.0	30.6	28	25.0	21.4	17.2	8.5	--
100SGP27.5	10 (7.5)	4" (100)		40.4	38.3	36	32.8	29.1	25	15.6	5.6
100SGP211	15 (11)	4" (100)		52.5	48.9	46.3	43.4	40.2	36.2	25.6	15.6

Model	Power HP (kW)	Discharge inch (mm)	Standard	Max	Solid Passage mm	Weight (W/O Cable)		Phase	1ø	1ø	3ø	3ø	3ø	3ø	3ø
			m - m³/h	m - m³/h		1ø - kg	3ø - kg	Voltage	220V	230V	230V	380V	400V	415V	525V
100 SGP 25.5	7.5 (5.5)	4" (100)	21.5-60	35-114	30.0	--	67	Full Load Ampere	--	--	20.2	11.7	11.3	11.2	8.8
100 SGP 27.5	10 (7.5)	4" (100)	29-60	43-126	30.0	--	73.0		--	--	26.0	15.3	14.5	14.4	11.4
100 SGP 211	15 (11)	4" (100)	39.5-60	54-138	30.0	--	82.0		--	--	39.0	22.2	21.6	21.6	17.1

Dimensions

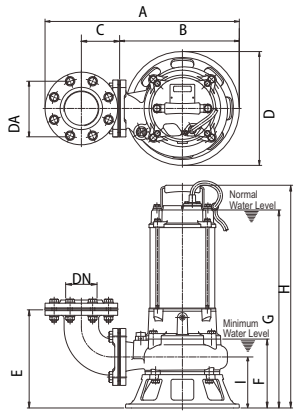

100SGP25.5 • 100SGP27.5 • 100SGP211

Elbow (flange) set	Application Model	Dimensions [mm]				Holes
		DN	DB	DC	DD	
ESB4-175K	100 SGP25.5	100	175	210	15	8
ESB4-175K	100 SGP27.5	100	175	210	15	8
ESB4-175K	100 SGP211	100	175	210	15	8

Model	Dimensions [mm]									
	DN	A	B	C	D	E	F	G	H	H
100 SGP25.5	100	591	373	113	345	276	198	585	684	151
100 SGP27.5	100	591	373	113	345	276	198	585	684	151
100 SGP211	100	591	373	113	345	276	198	625	724	151

GRS (Guid Rail System) Dimensions

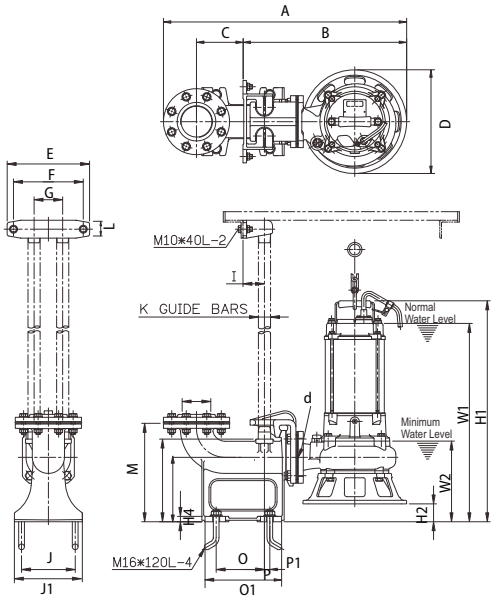

100SGP25.5 • 100SGP27.5 • 100SGP211 : GRS ST-100BH

Model	Dimensions [mm]																							
	DN	A	B	C	D	E	F	G	I	J	J1	K	L	M	N	O	O1	P	P1	W1	W2	H1	H2	H3	H4
100SGP25.5	100	864	609	150	345	230	195	80	60	170	190	32	50	275	231	155	250	15	40	615	228	714	30	180	15
100SGP27.5	100	864	609	150	345	230	195	80	60	170	190	32	50	275	231	155	250	15	40	615	228	714	30	180	15
100SGP211	100	864	609	150	345	230	195	80	60	170	190	32	50	275	231	155	250	15	40	655	228	754	30	180	15

80SGU21.5 • 80SGU22.2 • 80SGU23.7

Specifications

Item		Description
Limits of use	Liquid Temp	0~40°C
	Applications	Corrosive / Food processing Liquids
	Submersion Depth	100feet (30m)
Type	Frequency	50Hz
	Motor	2P. Dry motor
	Insulation	Class F
	Protection	IP 68
	Protector	Auto-cut
	Bearing	Ball Type
	M.seal	Double M. Seals
	Impeller	Vortex
Material	Outer Cover	SCS14
	Motor Frame	SS316
	Main Shaft	SS316
	M.seal	Lower: Silicon/Silicon Upper: Carbon /Ceramic
	Casing	SCS14
	Impeller	SCS14
	Cable	VCT or H-07RN-F or SJOW/SOW
Optional		

80SGU21.5 80SGU22.2 80SGU23.7

U Type
Vortex Impeller

Performance Curves

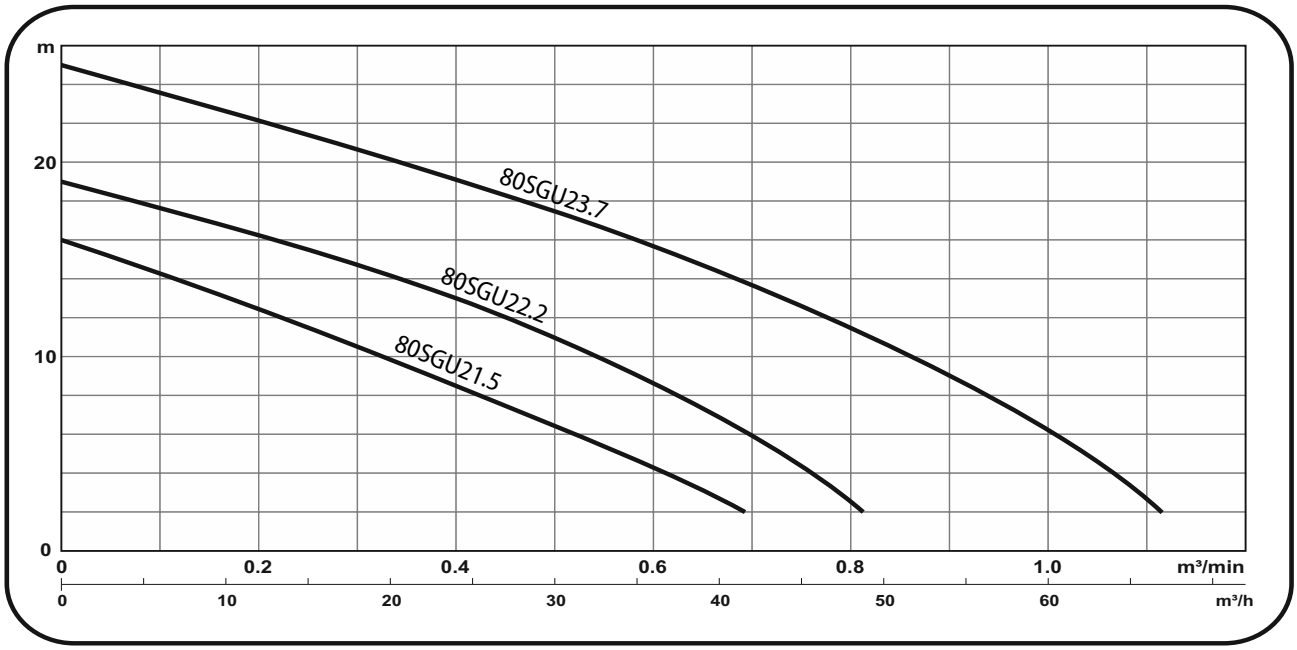

Model	Power HP (kW)	Discharge Inch (mm)	Q:m³/min	0.2	0.4	0.5	0.6	0.7	0.8	0.9	1
			Q:m³/h	12	24	30	36	42	48	54	60
80SGU21.5	2 (1.5)	3" (80)	H (m)	12.4	8.5	6.4	4.3	1.7	--	--	--
80SGU22.2	3 (2.2)	3" (80)		16.2	13.0	11.0	8.6	5.9	3.5	--	--
80SGU23.7	5 (3.7)	3" (80)		22.1	19.1	17.5	15.7	13.7	11.5	9.0	6.2

Model	Power HP (kW)	Discharge inch (mm)	Standard m - m³/h	Max m - m³/h	Solid Passage mm	Weight (W/O Cable) 1ø - kg	3ø - kg	Phase Voltage	1ø 220V	1ø 230V	3ø 230V	3ø 380V	3ø 400V	3ø 415V	3ø 525V
80SGU21.5	2 (1.5)	3" (80)	8.5-24	16.5-45	50	30.5	26.5	Full Load Ampere	10.2	10.0	6.1	3.6	3.4	3.4	2.7
80SGU22.2	3 (2.2)	3" (80)	13-24	19-51	50	34.0	29		15.0	14.6	8.6	5.1	5.0	4.8	3.8
80SGU23.7	5 (3.7)	3" (80)	17.5-30	25-69	50	--	40		--	--	14.0	8.2	7.8	7.7	6.2

Dimensions

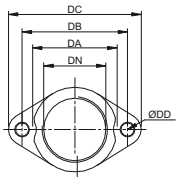

Nomenclature :

ESB 3 - 130

Elbow Set | Discharge (inch-DN) | Outlet PCD (mm-DB)

Thread Available	
PF	NPT

ESB3-130

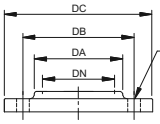

Thread Available	
PT (BSP.Tr.)	NPT

ESB3-150

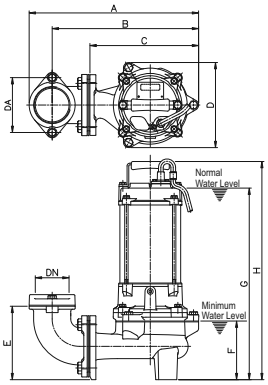

80SGU21.5 • 80SGU22.2

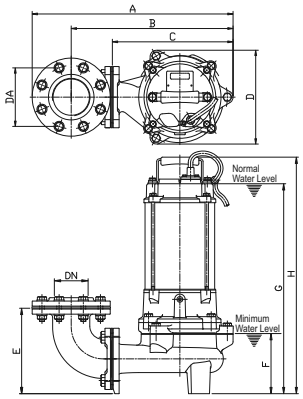

80SGU23.7

Elbow (flange) set	Application Model	Dimensions [mm]					Holes
		DN	DA	DB	DC	DD	
ESB3-130	80SGU21.5	80	110	130	155	12	2
ESB3-130	80SGU22.2	80	110	130	155	12	2
ESB3-150	80SGU23.7	80	110	150	185	15	8

Model	Dimensions [mm]									
	DN	DA	A	B	C	D	E	F	G	H
80SGU21.5	80	130	402	348	260	202	174	139	454	517
80SGU22.2	80	130	402	348	260	202	174	139	454	517
80SGU23.7	80	150	476	384	286	223	203	143	498	561

GRS (Guid Rail System) Dimensions

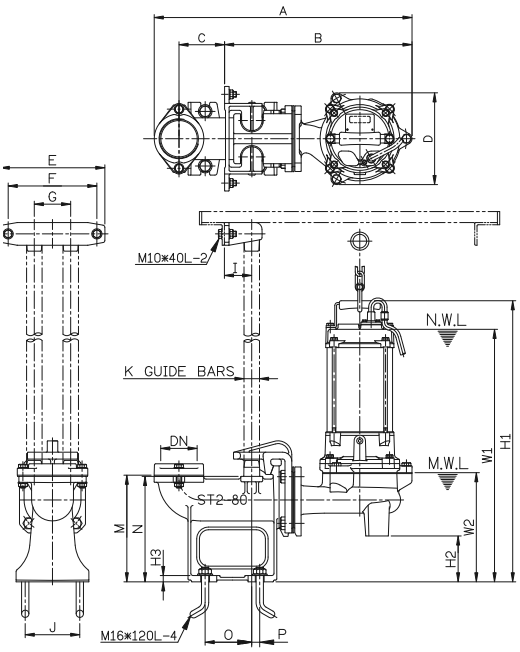

80SGPU1.5 • 80SGU22.2 : GRS ST2-80

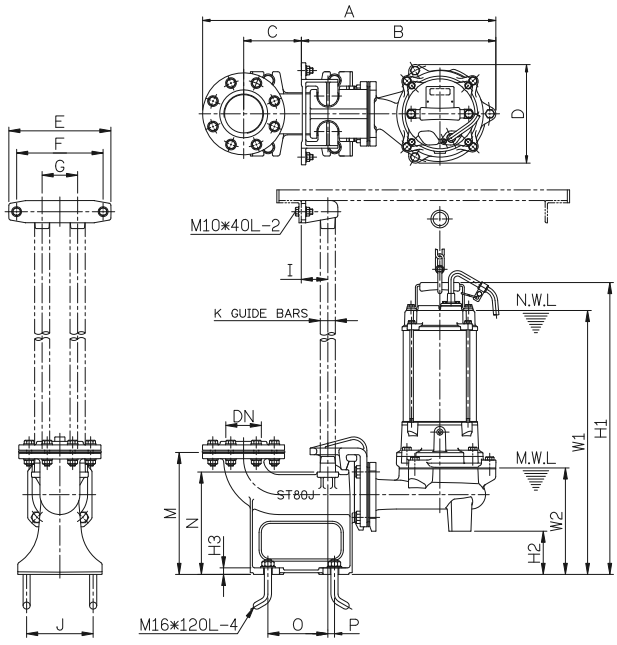

80SGU23.7 : GRS ST80J

Model	Dimensions [mm]																			
	DN	A	B	C	D	E	F	G	I	J	K	M	N	O	P	W1	W2	H1	H2	H3
80SGU21.5	80	568	413	100	202	230	195	80	60	120	32	235	232	103	18	555	240	618	101	14
80SGU22.2	80	568	413	100	202	230	195	80	60	120	32	235	232	103	18	555	240	618	101	14
80SGU23.7	80	662	439	130	223	230	195	80	60	150	32	275	231	135	15	595	240	658	98	15

80SGU25.5 • 80SGU27.5 • 80SGU211

Specifications

Item		Description
Limits of use	Liquid Temp	0~40°C
	Applications	Corrosive / Food processing liquids
	Submersion Depth	100feet (30m)
Type	Frequency	50Hz
	Motor	2P • Dry motor
	Insulation	Class H
	Protection	IP68
	Protector	Auto cut(7.5-10HP). MTS&MS (15HP)
	Bearing	Ball type
	M.seal	Double M.seal
	Impeller	Vortex
Material	Upper Cover	SCS14
	Motor Frame	SS316
	Main Shaft	SS316(7.5-10HP). SS630(15HP)
	M.seal	Lower: Silicon/Silicon Upper: Carbon/Ceramic
	Casing	SCS14
	Impeller	SCS14
	Cable	VCT or H07RN-F or SOW
Optional		

80SGU25.5. 80 SGU 27.5

80SGU211

Performance Curves

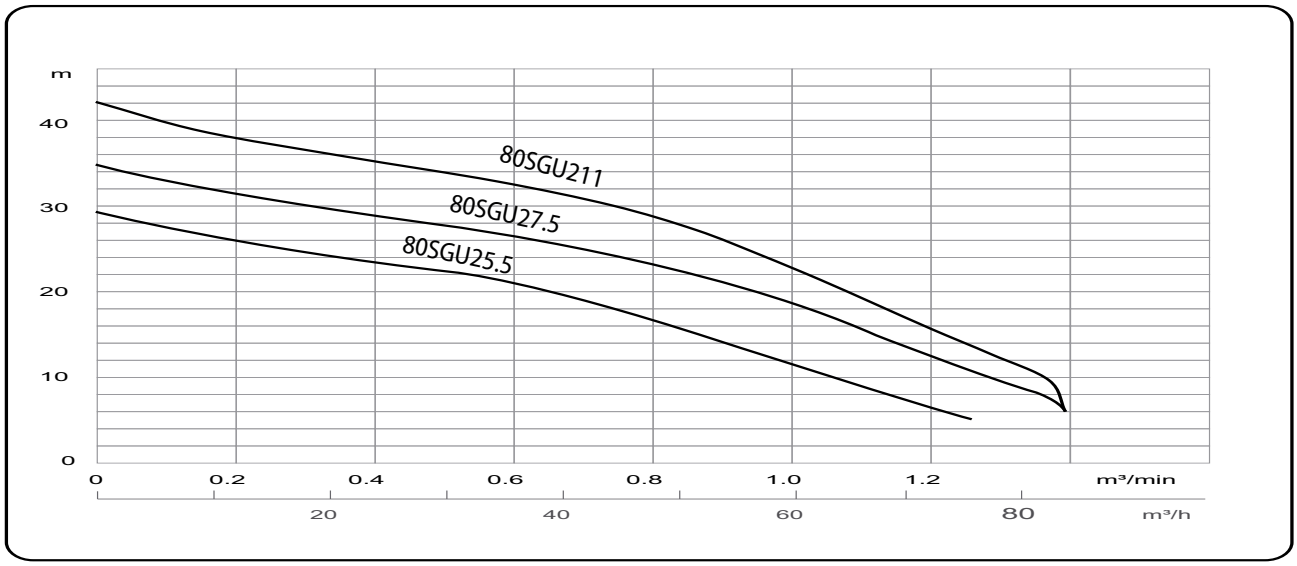

Model	Power HP (kW)	Discharge inch (mm)	Q:m³/min	0.1	0.2	0.3	0.4	0.6	0.8	1	1.2
			Q:m³/h	6	12	18	24	36	48	60	72
80SGU25.5	7.5 (5.5)	3" (80)	H (m)	27.6	26.1	24.8	23.6	21.2	17.0	11.8	6.6
80SGU27.5	10 (7.5)	3" (80)		33.0	31.6	30.1	28.8	26.5	23.4	18.7	13
80SGPU211	15 (11)	3" (80)		40.0	38.2	37	35.2	32.4	28.4	22.8	16

Model	Power HP (kW)	Discharge inch (mm)	Standard	Max	Solid Passage mm	Weight (W/O Cable)		Phase	1ø	1ø	3ø	3ø	3ø	3ø	3ø
			m - m³/h	m - m³/h		1ø - kg	3ø - kg	Voltage	220V	230V	230V	380V	400V	415V	525V
80 SGU 25.5	7.5 (5.5)	3" (80)	21-36	29.5-78	50.0	--	61	Full Load Ampere	--	--	20.2	11.7	11.3	11.2	8.8
80 SGU 27.5	10 (7.5)	3" (80)	26-36	35-87	50.0	--	67.0		--	--	26.0	15.3	14.5	14.4	11.4
80 SGU 211	15 (11)	3" (80)	33-36	42.5-90	50.0	--	76.0		--	--	39.0	22.2	21.6	21.6	17.1

Dimensions

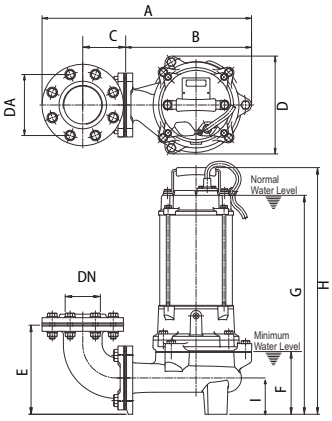

80SGU25.5 80 SGU 27.5 80 SGU 211

Elbow (flange) set	Application Model	Dimensions [mm]				Holes
		DN	DB	DC	DD	
ESB3-150K	80SGU25.5	80	150	185	15	8
ESB3-150K	80SGU27.5	80	150	185	15	8
ESB3-150K	80SGU211	80	150	185	15	8

Model	Dimensions [mm]									
	DN	A	B	C	D	E	F	G	H	I
80SGU25.5	80	499	309	98	258	203	144	558	657	83
80SGU27.5	80	499	309	98	258	203	144	558	657	83
80SGU211	80	499	309	98	258	203	144	598	697	83

GRS (Guid Rail System) Dimensions

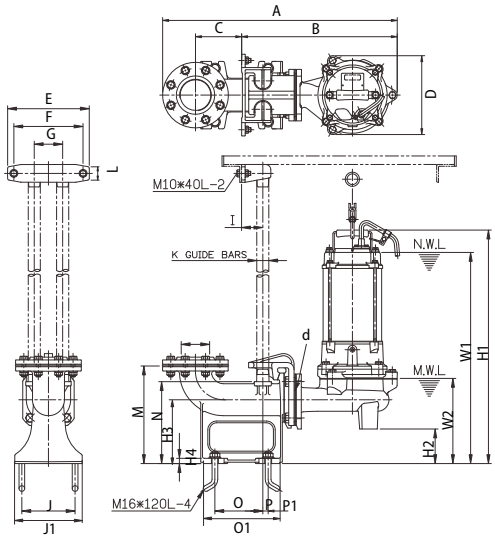

80SGU25.5 80 SGU 27.5 80 SGU 211 : GRS T-80DH

Model	Dimensions [mm]																							
	DN	A	B	C	D	E	F	G	I	J	J1	K	L	M	N	O	O1	P	P1	W1	W2	H1	H2	H3	H4
80SGU25.5	80	768	545	130	285	230	195	80	60	150	190	32	50	275	231	135	230	15	40	655	241	754	97	180	15
80SGU27.5	80	768	545	130	285	230	195	80	60	150	190	32	50	275	231	135	230	15	40	655	241	754	97	180	15
80SGU211	80	768	545	130	285	230	195	80	60	150	190	32	50	275	231	135	230	15	40	695	241	794	97	180	15

SW Series • Stainless Steel Submersible Pumps

Specifications

Item		Description
Limits of use	Liquid Temp	0~40°C
	Applications	Corrosive / Food processing Liquids
	Submersion Depth	100feet (30m)
Type	Frequency	50Hz
	Motor	2P • Dry motor
	Insulation	Class B
	Protection	IP 68
	Protector	Auto-cut (SW-05A 1Ø: Overheat)
	Bearing	Ball Type
	M.seal	Double M. Seals
	Impeller	Semi-open
Material	Outer Cover	SCS14
	Motor Frame	SS316
	Main Shaft	SS316
	M.seal	Lower: Silicon/Silicon Upper: Carbon /Ceramic
	Casing	SCS14
	Impeller	SCS14
	Cable	VCT or H-07RN-F or SJOW/SOW
Optional		Float switch (SW-05A: Upper cover & casing)

50SW2.4A

50SW2.4AF

Semi-open Impeller

Performance Curves

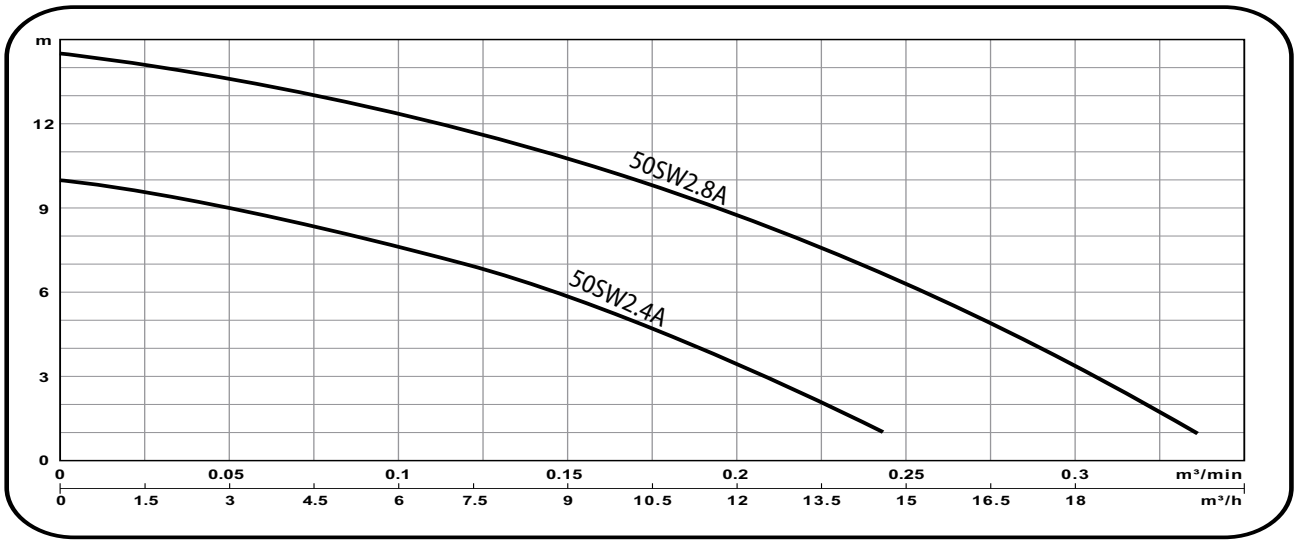

Model	Power HP (kW)	Discharge inch (mm)	Q:m³/min	0.025	0.05	0.1	0.15	0.2	0.25	0.3
			Q:m³/h	1.5	3	6	9	12	15	18
50SW2.4A	½ (0.4)	2" (50)	H (m)	9.5	9	7.6	5.8	3.4	0.6	--
50SW2.8A	1 (0.75)	2" (50)		14.1	13.6	12.3	10.7	8.7	6.3	3.4

Model	Power HP (kw)	Discharge inch (mm)	Standard m - m³/h	Max m - m³/h	Solid Passage	Weight (W/O Cable) 1ø - kg	3ø - kg	Phase Voltage	1ø 220V	1ø 230V	1ø 240V	3ø 230V	3ø 380V	3ø 400V	3ø 415V
50SW2.4A	½ (0.4)	2" (50)	7-7.2	10-15.6	10	15	14	Full Load Ampere	3.4	3.3	3.2	2.3	1.4	1.3	1.3
50SW2.8A	1 (0.75)	2" (50)	10-10.2	14.5-21	10	17	16		5.4	5.2	5	3.3	2	1.9	1.8

Dimensions

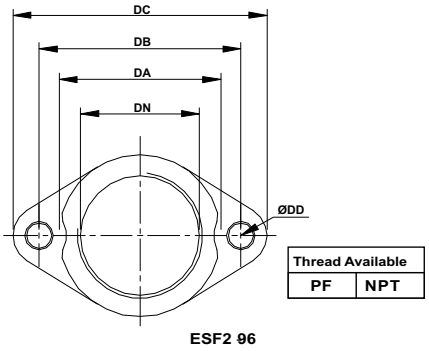

Nomenclature : ESF 2 - 96
Stainless Steel Flange Set; Discharge (inch-DN); Pitch Circle Diameter (mm-DB)

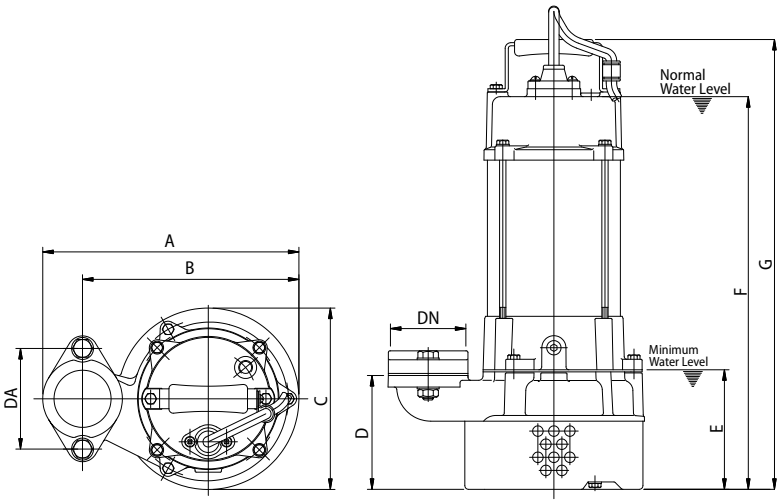

50SW2.4A • 50SW2.8A

Elbow (flange) set	Application Model	Dimensions [mm]				
		DN	DA	DB	DC	DD
ESF2-96	SW2.4 A	50	77	96	121	12
ESF2-96	SW2.8A	50	77	96	121	12

Model	Dimensions [mm]								
	DN	DA	A	B	C	D	E	F	G
SW2.4A	50	207	245	207	174	109	115	385	439
SW2.8A	50	207	245	207	174	109	115	385	439

GRS (Guid Rail System) Dimensions

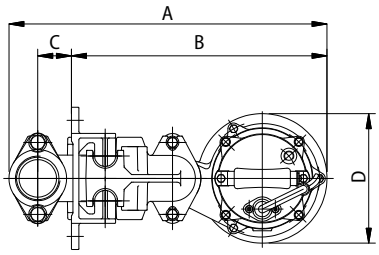

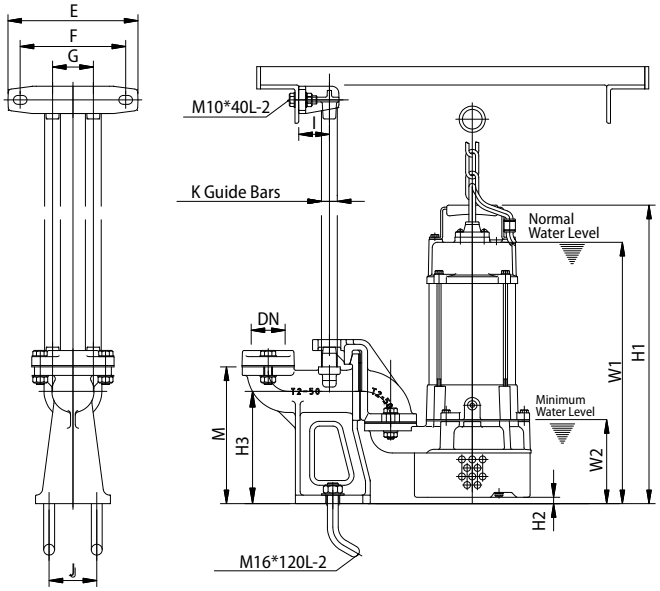

50SW2.4A • 50SW2.8A : GRS ST2-50

Model	Dimensions [mm]																
	DN	A	B	C	D	E	F	G	I	J	K	M	W1	W2	H1	H2	H3
50SW2.4A	50	425	342	45	173	190	155	60	50	70	19	201	395	110	449	8	165
50SW2.8A	50	425	342	45	173	190	155	60	50	70	19	201	395	110	449	8	165

80SW 21.5 • 80SW 22.2 • 80SW 23.7

Specifications

Item		Description
Limits of use	Liquid Temp	0~40°C
	Applications	Corrosive / Food processing Liquids
Type	Frequency	50Hz
	Motor	2P • Dry motor
	Insulation	Class F
	Protection	IP 68
	Protector	Auto-cut
	Bearing	Ball Type
	M.seal	Double M. Seals
	Impeller	Open
Material	Outer Cover	SCS14
	Motor Frame	SS316
	Main Shaft	SS316
	M.seal	Lower: Silicon/Silicon Upper: Carbon /Ceramic
	Casing	SCS14
	Impeller	SCS14
	Cable	VCT or H-07RN-F or SJOW/SOW

Performance curve

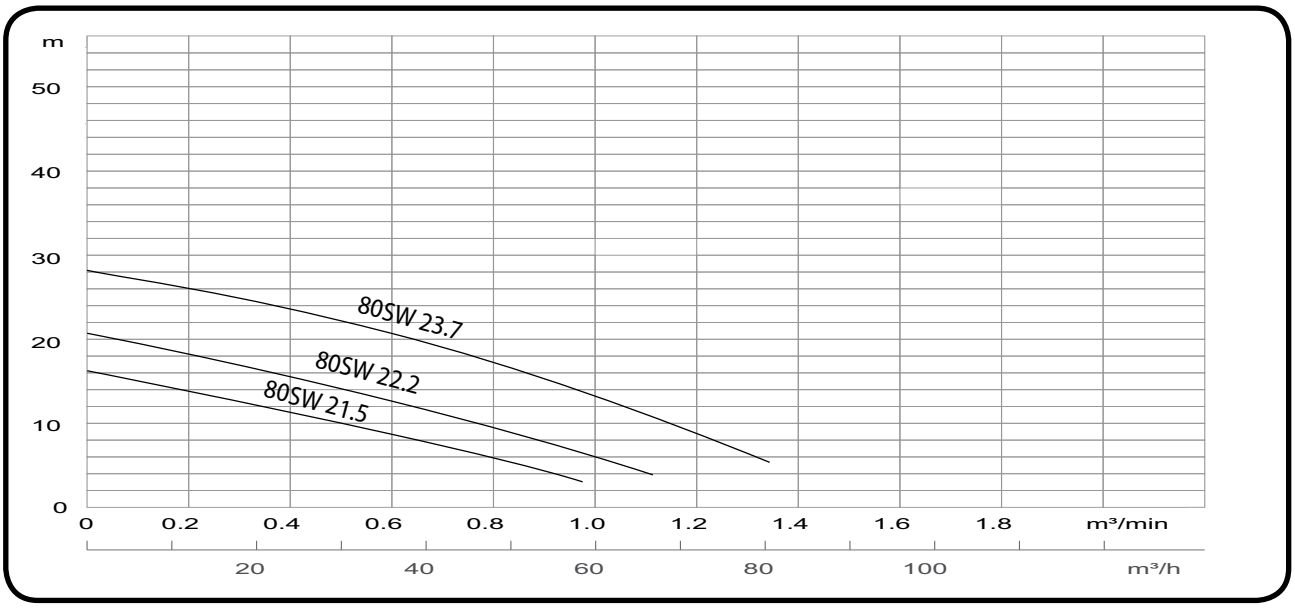

Model	Power HP(KW)	Discharge (mm)	Q:m³/min Q:m³/h	0.1 6	0.2 12	0.3 18	0.4 24	0.6 36	0.8 48	1 60	1.2 72
80SW 21.5	2(1.1)	3" (80)	H (m)	15.1	13.9	12.6	11.4	8.7	5.9	--	--
80SW 22.2	3(2.2)	3" (80)		19.6	18.3	17	15.6	12.6	9.5	6	--
80SW 23.7	5(3.7)	3" (80)		28.2	26.7	25.3	23.8	20.8	17.3	13.3	8.8

Model	Power HP(KW)	Discharge (mm)	Standard m-m³/h	Max m-m³/h	Solid Passage mm	Weight (W/O cable) 1ø kg	Weight (W/O cable) 3ø kg	Phase Voltage	1ø 110V	1ø 220V	1ø 230V	3ø 230V	3ø 380V	3ø 415V	3ø 575V
80 SW 21.5	2(1.5)	3" (80)	8-36	16.5-60	20.0	33.5	29.5	Full Load Ampere	--	10.2	10.0	6.1	3.6	3.4	2.7
80 SW 22.2	3(2.2)	3" (80)	12.5-36	21-66	20.0	37.5	32.5		--	15.0	14.6	8.6	5.1	4.8	3.8
80 SW 23.7	5(3.7)	3" (80)	20.5-36	30-81	20.0	--	44.5		--	--	--	14.0	8.2	7.7	6.2

Dimensions

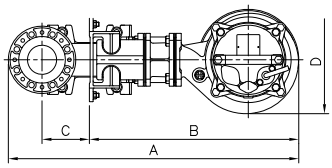

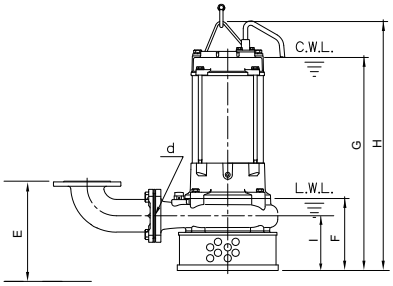

80SW 21.5 • 80SW 22.2

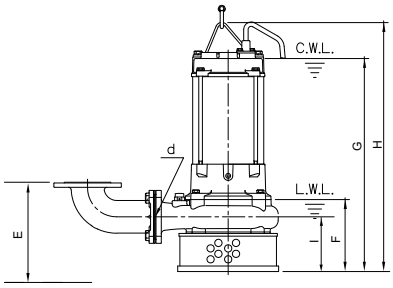

80SW 23.7

Elbow (Flange set)	Model	Dimension [mm]				Holes
		DN	DB	DC	DD	
ESB3-130K	80SW21.5	80	130	155	12	2
ESB3-130K	80SW 22.2	80	130	155	12	2
ESB3-150K	80SW23.7	80	150	185	15	8

Model	Dimension [mm]									
	DN	A	B	C	D	E	F	G	H	I
80SW21.5	80	390	248	88	212	217	162	457	520	122
80SW 22.2	80	390	248	88	212	217	162	457	520	122
80SW23.7	80	465	275	98	239	250	176	505	568	130

GRS (Guide Rail System) Dimension

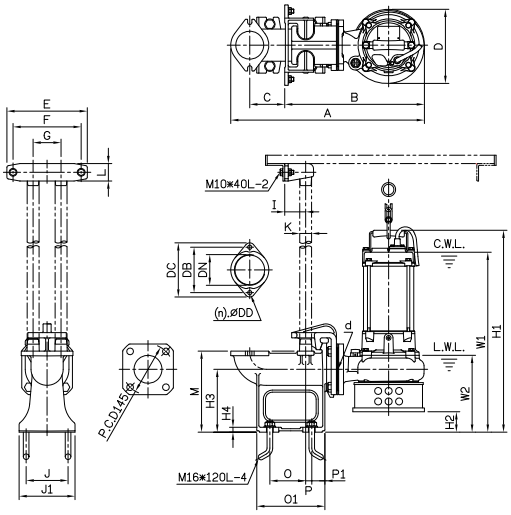

80SW 21.5 • 80SW 22.2:GRS ST2-80

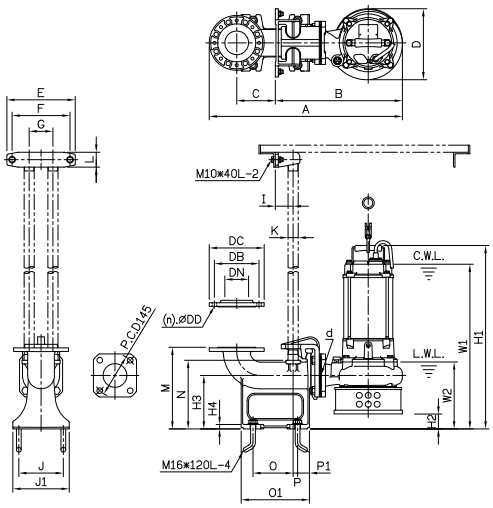

80SW 23.7: GRS ST80D

Model	Dimensions [mm]																							
	DN	A	B	C	D	E	F	G	I	J	J1	K	L	M	N	O	O1	P	P1	W1	W2	H1	H2	H3	H4
80SW21.5	80	555	400	100	212	230	195	80	60	120	160	32	50	232		103	195	18	38	515	220	578	59	180	14
80SW 22.2	80	555	400	100	212	230	195	80	60	120	160	32	50	232		103	195	18	38	515	220	578	59	180	14
80SW23.7	80	681	458	130	290	230	195	80	60	150	190	32	50	275	231	135	230	15	40	555	226	618	50	180	15

80(100)SW 25.5 • 80(100)SW 27.5 • 80(100)SW 211

Specifications

Item		Description
Limits of use	Liquid Temp	0~40°C
	Applications	Corrosive / Food processing Liquids
Type	Frequency	50Hz
	Motor	2P • Dry motor
	Insulation	Class H
	Protection	IP 68
	Protector	Auto-cut
	Bearing	Ball Type
	M.seal	Double M. Seals
	Impeller	Semi-open
Material	Outer Cover	SCS14
	Motor Frame	SS316
	Main Shaft	SS316(7.5-15HP) or SS630(15HP)
	M.seal	Lower: Silicon/Silicon Upper: Carbon /Ceramic
	Casing	SCS14
	Impeller	SCS14
	Cable	VCT or H-07RN-F or SJOW/SOW

80(100)SW 25.5 • 80(100)SW 27.5
80(100)SW 211

Performance curve

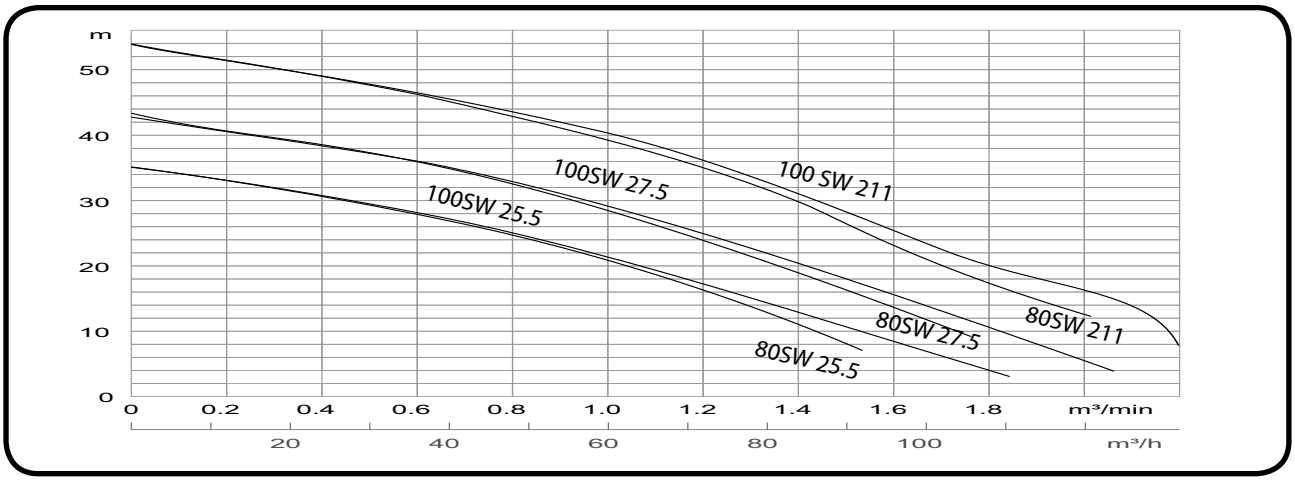

Model	Power HP(KW)	Discharge (mm)	Q:m³/min	0.2	0.4	0.6	0.8	1	1.2	1.6	2
			Q:m³/h	12	24	36	48	60	72	96	120
80SW 25.5	7.5 (5.5)	3" (80)	H (m)	33.4	30.2	26.8	23.0	19	14.7	--	--
100SW 25.5	7.5 (5.5)	4" (100)		33.0	30.2	27.2	23.7	19.9	15.8	6.6	--
80SW 27.5	10 (7.5)	3" (80)		41.7	38.8	35.6	32	28	23.4	12.4	
100SW 27.5	10 (7.5)	4" (100)		41.6	38.8	36	32.7	28.9	24.6	14.6	5
80SW 211	15 (11)	3" (80)		53.1	50.6	47.9	44.6	40.5	35.2	21.4	--
100SW 211	15 (11)	4" (100)		52.8	50.3	47.5	44.3	40.5	35	23.5	12.5

Model	Power HP(KW)	Discharge (mm)	Standard	Max	Solid Passage mm	Weight (W/O cable)		Phase	1ø	1ø	3ø	3ø	3ø	3ø	3ø
			m-m³/h	m-m³/h		1ø kg	3ø kg	Voltage	110V	220V	220V	230V	380V	460V	575V
80 SW 25.5	7.5 (5.5)	3" (80)	26.5-36	36-93	20.0	--	66	Full Load Ampere	--	--	19.8	19.0	11.5	9.5	7.9
100 SW 25.5	7.5 (5.5)	4" (100)	20-60	36-108	20.0	--	66				19.8	19.0	11.5	9.5	7.9
80 SW 27.5	10 (7.5)	3" (80)	35-36	44-105	20.0	--	72.0		--	--	25.8	24.6	15.0	12.3	10.1
100 SW 27.5	10 (7.5)	4" (100)	28-60	44-123	20.0	--	72.0				25.8	24.6	15.0	12.3	10.1
80 SW 211	15 (11)	3" (80)	47-36	56-120	20.0	--	81.0				37.0	35.5	21.8	17.7	14.9
100 SW 211	15 (11)	4" (100)	39.5-60	56-135	20.0	--	81.0		--	--	37.0	35.5	21.8	17.7	14.9

Dimensions

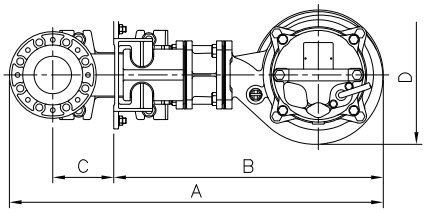

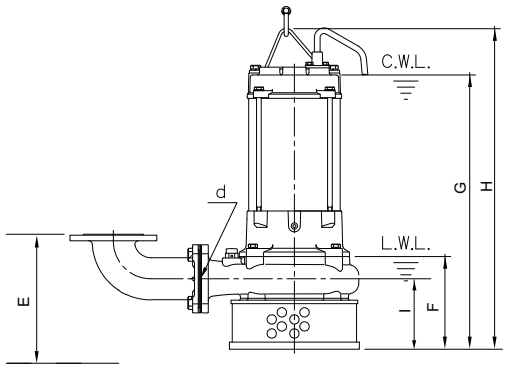

Elbow (Flange set)	Model	Dimension [mm]				Holes
		DN	DB	DC	DD	
ESB3-150K	80SW25.5	80	150	185	15	8
ESB3-150K	80SW 27.5	80	150	185	15	8
ESB3-150K	80SW211	80	150	185	15	8

Model	Dimension [mm]									
	DN	A	B	C	D	E	F	G	H	I
80SW25.5	80	528	338	98	286	271	198	585	684	151
80SW 27.5	80	528	338	98	286	271	198	585	684	151
80SW211	80	528	338	98	286	271	198	625	724	151

Elbow (Flange set)	Model	Dimension [mm]				Holes
		DN	DB	DC	DD	
ESB4-175K	100 SW25.5	100	175	210	15	8
ESB4-175K	100 SW27.5	100	175	210	15	8
ESB4-175K	100 SW211	100	175	210	15	8

Model	Dimension [mm]									
	DN	A	B	C	D	E	F	G	H	H
100 SW25.5	100	556	338	113	286	276	198	585	684	151
100 SW27.5	100	556	338	113	286	276	198	585	684	151
100 SW211	100	556	338	113	286	276	198	625	724	151

GRS (Guide Rail System) Dimension

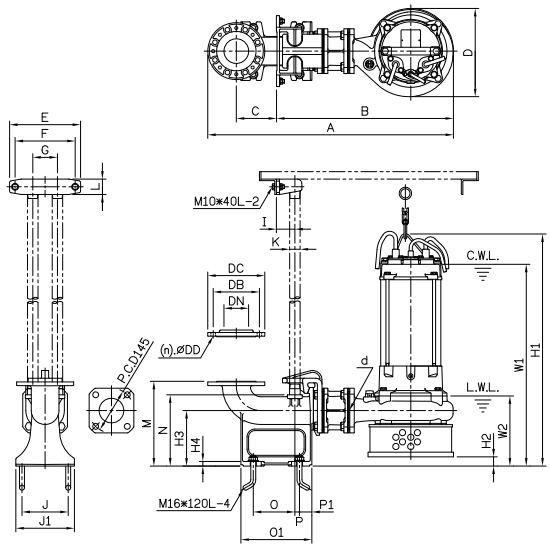

80(100)SW 25.5 • 80(100)SW 27.5 • 80(100)SW 211: GRS ST80DH/ ST100(80)H

Model	Dimensions [mm]																							
	DN	A	B	C	D	E	F	G	I	J	J1	K	L	M	N	O	O1	P	P1	W1	W2	H1	H2	H3	H4
80SW25.5	80	797	574	130	286	230	195	80	60	150	190	32	50	275	231	135	230	15	40	615	228	714	30	180	15
80SW 27.5	80	797	574	130	286	230	195	80	60	150	190	32	50	275	231	135	230	15	40	615	228	714	30	180	15
80SW211	80	797	574	130	286	230	195	80	60	150	190	32	50	275	231	135	230	15	40	655	228	754	30	180	15

Model	Dimensions [mm]																							
	DN	A	B	C	D	E	F	G	I	J	J1	K	L	M		O	O1	P	P1	W1	W2	H1	H2	H3	H4
100SW25.5	100	829	574	150	286	230	195	80	60	170	210	32	50	285	231	155	250	15	40	615	228	714	30	180	15
100SW27.5	100	829	574	150	286	230	195	80	60	170	210	32	50	285	231	155	250	15	40	615	228	714	30	180	15
100SW211	100	829	574	150	286	230	195	80	60	170	210	32	50	285	231	155	250	15	40	655	228	754	30	180	15

DC Series • Submersible Dewatering Pumps

Power: 1.1 ~7.5 kW
Max. Head: 39 m
Max. Capacity: 162 m^3/h

Feature

- Complete Stainless steel outer cover of DC 1.5 HP ~ 10 HP (1.1KW ~ 7.5KW) models provide exceptional design, with light weight structure of less than 175 lbs (80Kg) and diameter of 11.2 inches (286mm) that provide miniature outlook. Civil engineering, dewatering of tunneling and ground works, also for storm water sewers.
- Dewatering of fluids contain solid sediments.
- Easy of mobility for use by contractors, installers and service industries.

Applications

- Civil engineering, dewatering of tunneling and ground works, also for storm water sewers.
- Dewatering of fluids contain solid sediments.
- Easy of mobility for use by contractors, installers and service industries.

HiCr Impeller

High chrome alloy (HiCr) steel hardness of 55-65 HRC impeller to stand high abrasive application.

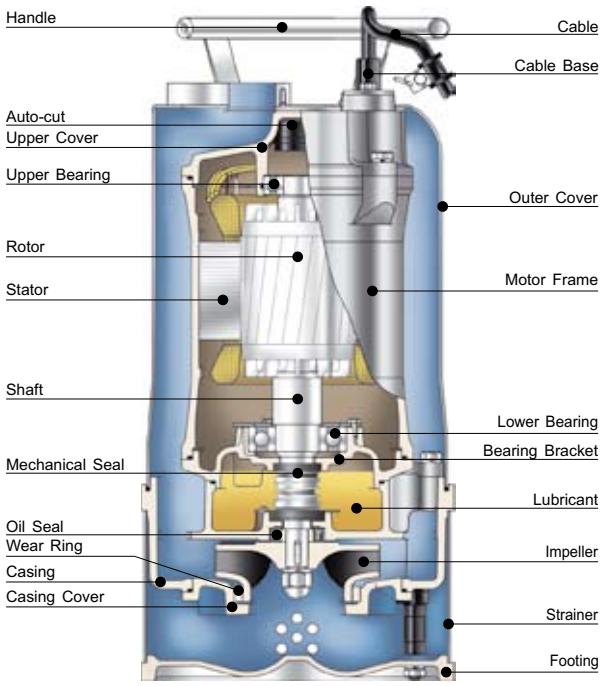

Definition of model

DC	-	2	15	F
Type		Discharge inch	HP	Float

100	-	DC	L	2	7.5
Discharge mm		Type	Impeller Type	Pole	kW

DC-215 • 50DCH21.5 • 50DCH22.2

Specifications

Item		Description
Limits of use	Liquid Temp	0~40°C
	Applications	Construction Sites · Basins Dewatering
	Submersion Depth	100feet (30m)
Type	Frequency	50Hz
	Motor	2P. Dry motor
	Insulation	Class F
	Protection	IP 68
	Protector	Auto-cut
	Bearing	Ball Type
	M.seal	Double M. Seals
	Impeller	Semi-open
Material	Outer Cover	SS304
	Upper Cover	Cast Iron
	Motor Frame	Cast Iron. (SS304:1.5HP)
	Main Shaft	SS403
	M.seal	Lower: Silicon/Silicon Upper: Carbon /Ceramic
	Casing	Cast Iron
	Impeller	HiCr
	Wear Ring	HiCr
	Cable	VCT or H-07RN-F or SJOW/SOW
Optional		

DC-215F 50DCH21.5 50DCH22.2

H Type
Semi-open Impeller

Performance Curves

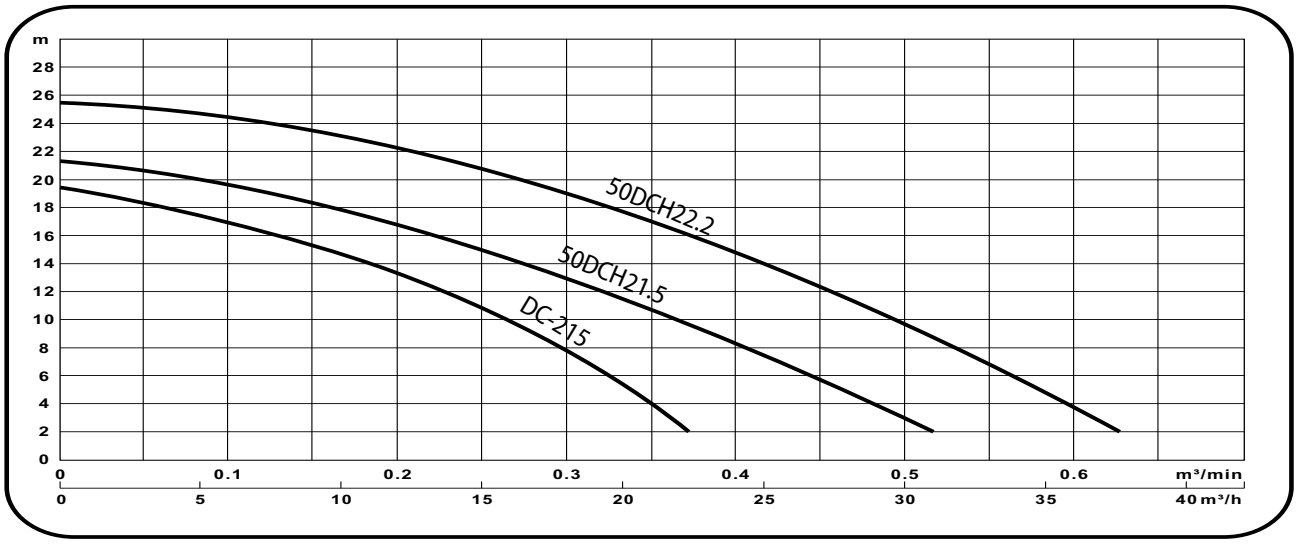

Model	Power HP (KW)	Discharge Inch (mm)	Q:m³/min	0.05	0.1	0.15	0.2	0.3	0.4	0.5	0.6
			Q:m³/h	3	6	9	12	18	24	30	36
DC-215	1½ (1.1)	2" (50)	H (m)	18	17	16	13.5	8.3	--	--	--
50DCH21.5	2 (1.5)	2" (50)		20.7	19.7	18.4	16.8	12.9	8.2	3	--
50DCH22.2	3 (2.2)	2" (50)		25.1	24.3	23.3	22.1	19	14.7	9.6	3.8

Model	Power HP (kw)	Discharge inch (mm)	Standard m - m³/h	Max m - m³/h	Solid Passage	Weight (W/O Cable) 1ø - kg	3ø - kg	Phase Voltage	1ø 220V	1ø 230V	1ø 240V	3ø 230V	3ø 380V	3ø 400V	3ø 415V
DC-215	1½ (1.1)	2" (50)	13.5 - 12	19.5 - 24	7.5	28	24	Full Load Ampere	8.4	8.2	8	4.9	2.9	2.8	2.7
50DCH21.5	2 (1.5)	2" (50)	15 - 15	21.5 - 33	10	40	36		10.4	10	9.8	6.1	3.6	3.5	3.4
50DCH22.2	3 (2.2)	2" (50)	19 - 18	25.5 - 39	10	45	39		15	14.6	14.6	8.7	5.2	5.1	4.8

Outlet Connection

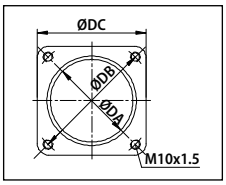

Outlet Base

Model	Dimensions [mm]		
	DA	DB	DC
DC1.5~2.2kW	65	98	89

Optional Outlet Accessories

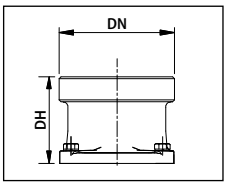

Male Thread Type (LOT)

Male Thread	Application Model	Dimensions [mm]	
		DN	DH
LOT2-98	DC1.5~2.2kW	50	80

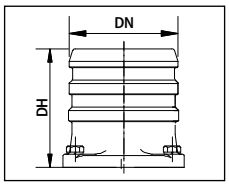

Hose (LOH)

Hose	Application Model	Dimensions [mm]	
		DN	DH
LOH2-98	DC1.5~2.2kW	50	80

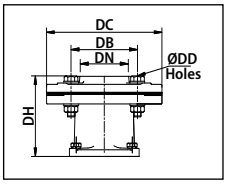

Double Flange Set (LKTF)

Double Flange Set	Application Model	Dimensions [mm]					Holes
		DN	DB	DC	DD	DH	
LKTF2-105-125*98	DC 1.5~2.2kW	50	105	160	18	110	4

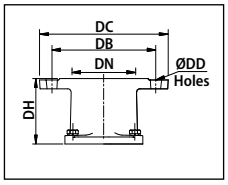

Flange (LOTF)

Flange	Application Model	Dimensions [mm]					Holes
		DN	DB	DC	DD	DH	
LOTF2-105-125*98	DC 1.5~2.2kW	50	125	160	18	78	4

Dimensions

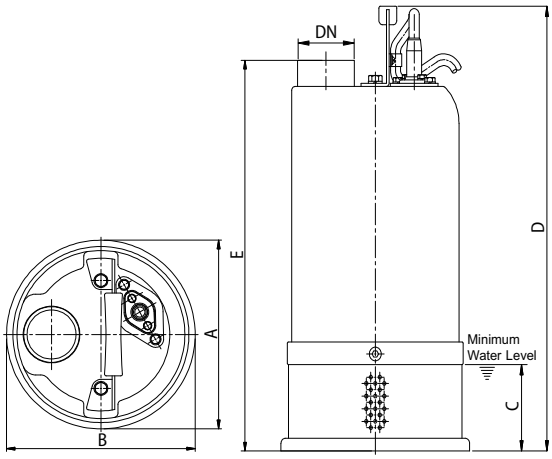

DC-215

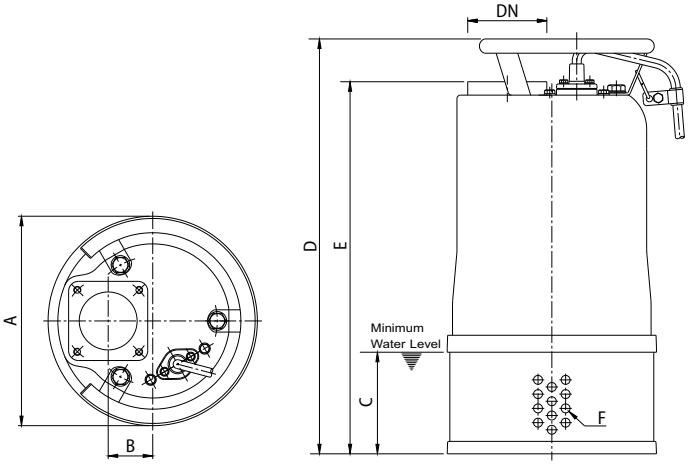

50DCH21.5 • 50DCH22.2

Model	Dimension[mm]								
	DN	A	B	C	D		E		F
					1 Ø	3 Ø	1 Ø	3 Ø	
DC 215	50	210	210	85	482	423	370	429	--
50DCH21.5	50	235	50	115	511	466	448	403	10
50DCH22.2	50	235	50	115	541	466	478	403	10

80DCN21.5 • 80DCN22.2 • 80DCN23.7 • 100DCL23.7

Specifications

Item		Description
Limits of use	Liquid Temp	0~40°C
	Applications	Construction Sites · Basins Dewatering
	Submersion Depth	100feet (30m)
Type	Frequency	50Hz
	Motor	2P. Dry motor
	Insulation	ClassF
	Protection	IP 68
	Protector	Auto-cut
	Bearing	Ball Type
	M.seal	Double M. Seals
	Impeller	Close
Material	Upper Cover	Cast Iron
	Motor Frame	Cast Iron
	Main Shaft	SS403. SS304 for 5HP
	M.seal	Lower: Silicon/Silicon Upper: Carbon /Ceramic
	Casing	Cast Iron
	Impeller	HiCr
	Cable	VCT or H-07RN-F or SJTW/SJOW
Optional		

80DCN21.5

100DCL23.7

N/L Type
Enclosed-channel Impeller

Performance Curves

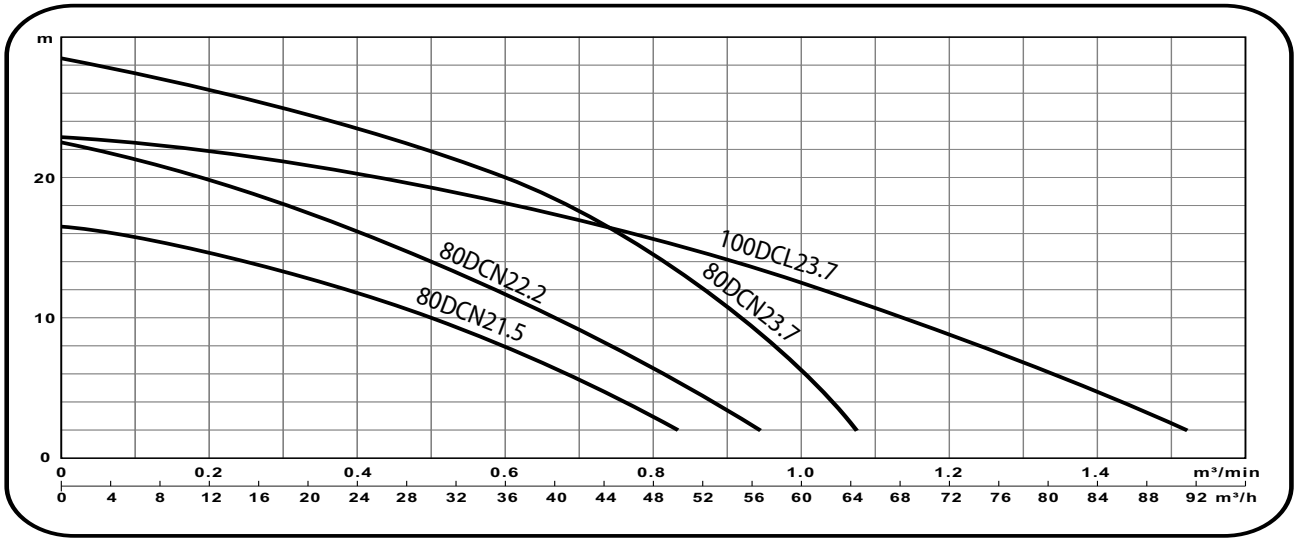

Model	Power HP (kw)	Discharge inch (mm)	Q:m³/min	0.1	0.2	0.4	0.6	0.8	1	1.2	1.4
			Q:m³/h	6	12	24	36	48	60	72	84
80DCN21.5	2 (1.5)	3" (80)	H(m)	15.7	14.6	11.8	7.9	3	--	--	--
80DCN22.2	3 (2.2)	3" (80)		21.3	19.8	16.2	11.7	6.4	--	--	--
80DCN23.7	5 (3.7)	3" (80)		27.4	26.2	23.5	20	14.5	6.3	--	--
100DCL23.7	5 (3.7)	4" (100)		22.5	21.9	20.3	18.2	15.6	12.5	8.8	4.7

Model	Power HP (kW)	Discharge inch (mm)	Standard m - m³/h	Max m - m³/h	Solid Passage mm	Weight (W/O Cable) 1ø - kg	3ø - kg	Phase Voltage	1ø 220V	1ø 230V	1ø 240V	3ø 230V	3ø 380V	3ø 400V	3ø 415V
80DCN21.5	2 (1.5)	3" (80)	10 - 30	17 - 54	10	40	36	Full Load Ampere	10.4	10	9.8	6.1	3.6	3.5	3.4
80DCN22.2	3 (2.2)	3" (80)	14 - 30	22.5 - 60	10	45	39		15	14.6	14.6	8.7	5.2	5.1	4.8
80DCN23.7	5 (3.7)	3" (80)	21.5 - 30	29 - 72	10	--	44		--	--	--	14.3	8.3	8.3	7.9
100DCL23.7	5 (3.7)	4" (100)	12.5 - 60	23 - 99	10	--	44		--	--	--	14.3	8.3	8.3	7.9

Outlet Connection

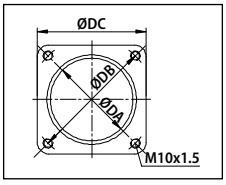

Outlet Base

Model	Dimensions [mm]		
	DA	DB	DC
DC1.5~3.7kW	65	98	89

Optional Outlet Accessories

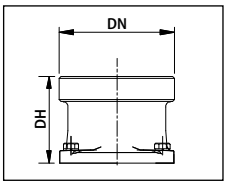

Male Thread Type (LOT)

Male Thread	Application Model	Dimensions [mm]	
		DN	DH
LOT2.5-98	DC1.5~3.7kW	65	80
LOT3-98	DC1.5~3.7kW	80	80
LOT4-98	DC1.5~3.7kW	100	100

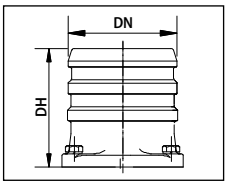

Hose (LOH)

Hose	Application Model	Dimensions [mm]	
		DN	DH
LOH3-98	DC1.5~3.7kW	80	100
LOH4-98	DC1.5~3.7kW	100	115

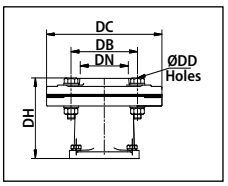

Double Flange Set (LKF • LKTF)

Double Flange Set	Application Model	Dimensions [mm]					Holes
		DN	DB	DC	DD	DH	
LKF3-150*98	DC1.5~3.7kW	80	150	185	15	112	8
LKTF2-105-125*98	DC1.5~3.7kW	80	105 125	160	18 20	110	4
LKTF3-145-160*98	DC1.5~3.7kW	80	145 160	195	18 20	112	8
LKTF4-165-190*98	DC1.5~3.7kW	100	165 190	225	18 20	132	8

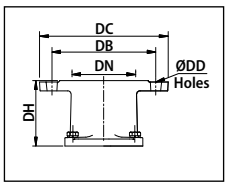

Flange (LOF • LOTF)

Flange	Application Model	Dimensions [mm]					Holes
		DN	DB	DC	DD	DH	
LOF3-150*98	DC1.5~3.7kW	80	150	185	15	95	8
LOTF3-145-160*98	DC1.5~3.7kW	80	145 160	195	18 20	95	8
LOTF4-165-190*98	DC1.5~3.7kW	100	165 190	225	18 20	100	8

Casing Cover

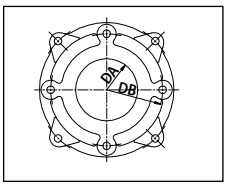

Cassing Cover

Application Model	Dimensions [mm]		
	DA	DB	Bolt
80DCN21.5	67	140	M12 x 25
80DCN22.2	67	140	M12 x 25
80DCN23.7	67	140	M12 x 25
100DCL23.7	80	150	M12 x 25

Dimensions

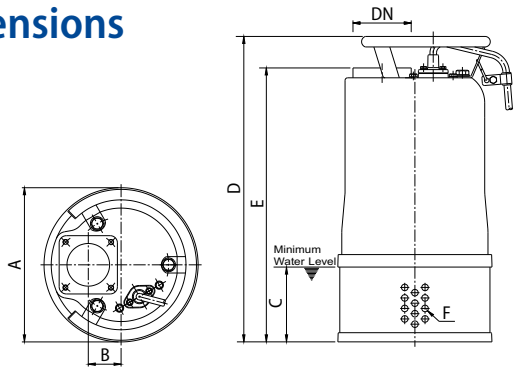

80DCN21.5 • 80DCN22.2 • 80DCN23.7 • 100DCL23.7

Model	Dimensions [mm]								
	DN	A	B	C	D		E		F
					1 Ø	3 Ø	1 Ø	3 Ø	
80DCN21.5	80	235	50	115	511	466	448	403	10
80DCN22.2	80	235	50	115	541	466	478	403	10
80DCN23.7	80	235	50	115	--	496	--	433	10
100DCL23.7	100	235	50	115	--	511	--	448	10

80DCH25.5 • 100DCN25.5 • 100DCN27.5 •150DCL25.5 • 150DCL27.5

Specifications

Item		Description
Limits of use	Liquid Temp	0~40°C
	Applications	Construction Sites · Basins Dewatering
	Submersion Depth	100feet (30m)
Type	Frequency	50Hz
	Motor	2P. Dry motor
	Insulation	Class H
	Protection	IP 68
	Protector	Auto-cut
	Bearing	Ball Type
	M.seal	Double M. Seals
	Impeller	Enclosed-channel Semi - open (80DCH25.5)
Material	Upper Cover	Cast Iron
	Motor Frame	Cast Iron
	Main Shaft	SS304
	M.seal	Lower: Silicon/Silicon Upper: Carbon /Ceramic
	Casing	Cast Iron
	Impeller	HiCr
	Wear ring	HiCr
	Cable	VCT or H-07RN-F or SOW
Optional		

100DCN25.5

150DCL25.5

150DCL27.5

H Type
Semi-open Impeller

N/L Type
Enclosed-chanel Impeller

Performance Curves

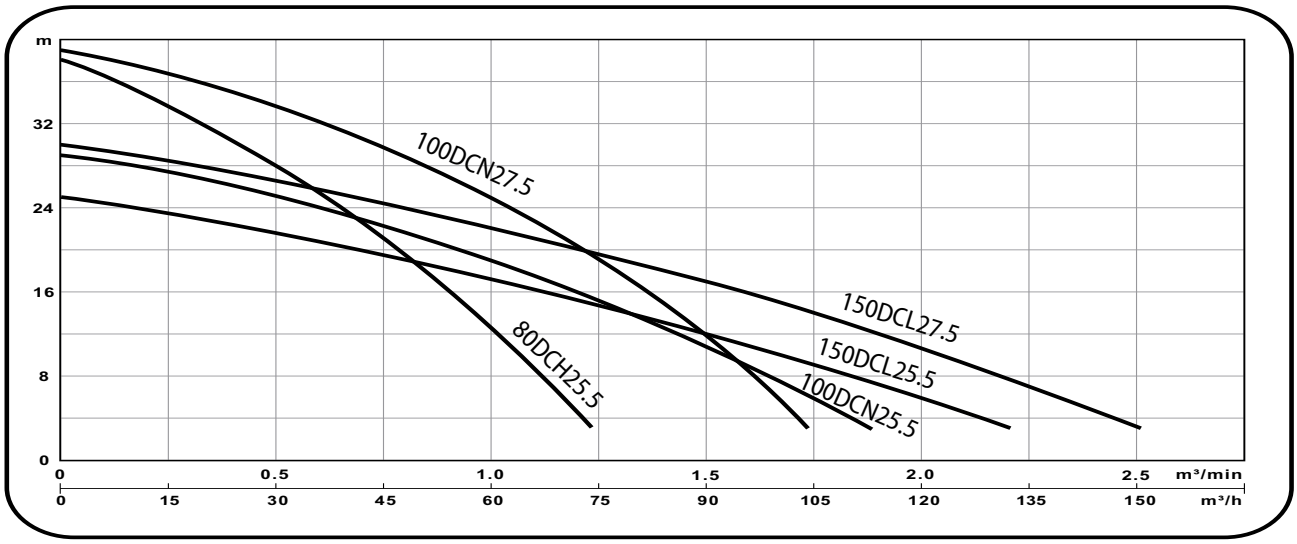

Model	Power HP (KW)	Discharge inch (mm)	Q:m³/min	0.25	0.5	0.75	1	1.25	1.5	2.0	2.25
			Q:m³/h	15	30	45	60	75	90	120	135
80DCH25.5	7½ (5.5)	3" (80)	H (m)	33.5	28	21	12.5	2.3	--	--	--
100DCN25.5	7½ (5.5)	4" (100)		28	25.1	22.3	19	15.1	10.8	--	--
100DCN27.5	10 (7½)	4" (100)		36.7	33.5	29.7	24.8	19	12	--	--
150DCL25.5	7½ (5.5)	6" (150)		23.5	21.5	19.5	17	14.6	12	5.8	2.4
150DCL27.5	10 (7½)	6" (150)		28.5	26.5	24.4	22	19.6	17	10.6	7

Model	Power HP (kw)	Discharge inch (mm)	Standard m - m³/h	Max m - m³/h	Solid Passage mm	Weight (W/O Cable) 1ø - kg	Weight (W/O Cable) 3ø - kg	Phase Voltage	1ø 220V	1ø 230V	1ø 240V	3ø 230V	3ø 380V	3ø 400V	3ø 415V
80DCH25.5	7½ (5.5)	3" (80)	28-30	38-78	10	--	72	Full Load Ampere	--	--	--	20	11.8	11.6	11
100DCN25.5	7½ (5.5)	4" (100)	19-60	29-120	10	--	75		--	--	--	20	11.8	11.6	11
100DCN27.5	10 (7½)	4" (100)	25-60	39-108	10	--	80		--	--	--	26.4	15.6	15.3	14.5
150DCL25.5	7½ (5.5)	6" (150)	12-90	25-144	10	--	78		--	--	--	20	11.8	11.6	11
150DCL27.5	10 (7½)	6" (150)	17-90	30-162	10	--	81		--	--	--	26.4	15.6	15.3	14.5

Outlet Connection

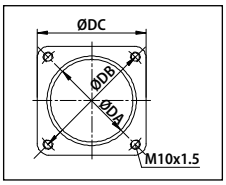

Outlet Base

Model	Dimensions [mm]		
	DA	DB	DC
DC5.5~7.5W	87	127	112

Optional Outlet Accessories

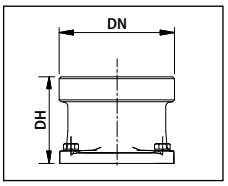

Male Thread Type (LOT)

Male Thread	Application Model	Dimensions [mm]	
		DN	DH
LOT2.5-127	80DCH25.5	65	110
LOT3-127	80DCH25.5	80	85
LOT4-127	DC5.5~7.5W	100	85
LOT6-127	DC5.5~7.5W	150	140

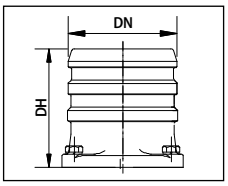

Hose (LOH)

Hose	Application Model	Dimensions [mm]	
		DN	DH
LOH3-127	80DCH25.5	80	110
LOH4-127	DC5.5~7.5W	100	110
LOH6-127	DC5.5~7.5W	150	172

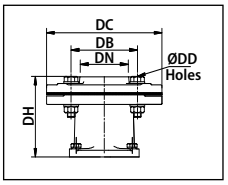

Double Flange Set (LKF • LKTF)

Double Flange Set	Application Model	Dimensions [mm]					Holes
		DN	DB	DC	DD	DH	
LKF3-150*127	DC5.5~7.5kW	80	150	185	15	122	8
LKTF3-145-160*127	DC5.5~7.5kW	80	145 160	195	18 20	117	8
LKTF4-165-190*127	DC5.5~7.5kW	100	165 190	225	18 20	119	8
LKTF6-240*127	DC5.5~7.5kW	150	240	280	23	162	8

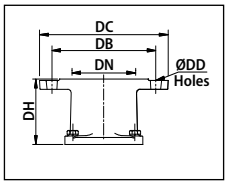

Flange (LOF • LOTF)

Flange	Application Model	Dimensions [mm]					Holes
		DN	DB	DC	DD	DH	
LOF3-150*127	DC5.5~7.5kW	80	150	185	15	90	8
LOTF3-145-160*127	DC5.5~7.5kW	80	145 160	195	18 20	85	8
LOTF4-165-190*127	DC5.5~7.5kW	100	165 190	225	18 20	87	8
LOTF6-240*127	DC5.5~7.5kW	150	240	280	23	120	8

Casing Cover

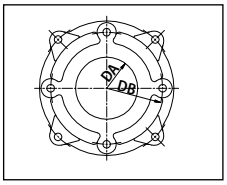

Cassing Cover

Application Model	Dimensions [mm]		
	DA	DB	Bolt
100DCN25.5	87	150	M12 x 25
100DCN27.5	87	150	M12 x 25
150DCL25.5	97	175	M12 x 25
150DCL27.5	97	175	M12 x 25

Dimensions

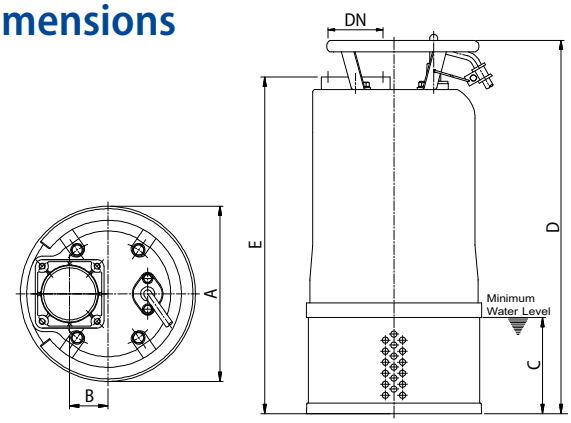

80DCH25.5 • 100DCN25.5 • 100DCN27.5 • 150DCL27.5

Model	Dimensions [mm]					
	DN	A	B	C	D	E
80DCH25.5	80	286	63	130	610	550
100DCN25.5	100	286	63	130	610	550
100DCN27.5	100	286	63	130	610	550
150DCL25.5	150	286	63	130	610	550
150DCL27.5	150	286	63	130	610	550

100DC211 • 150DC215

Specifications

Item		Description
Limits of use	Liquid Temp	0~40°C
	Applications	Construction Sites · Basins Dewatering
	Submersion Depth	100feet (30m)
Type	Frequency	50Hz
	Motor	2P. Dry motor
	Insulation	Class H
	Protection	IP 68
	Protector	Auto-cut
	Bearing	Ball Type
	M.seal	Double M. Seals
	Impeller	Enclosed-channel
Material	Upper Cover	FC200
	Motor Frame	FC200
	Main Shaft	SUS420J2
	M.seal	Lower: Silicon/Silicon Upper: Carbon /Ceramic
	Casing	Cast Iron
	Impeller	HiCr
	Cable	VCT or H-07RN-F or SOW

N/L Type
Enclosed-chanel Impeller

100DC211

Performance Curves

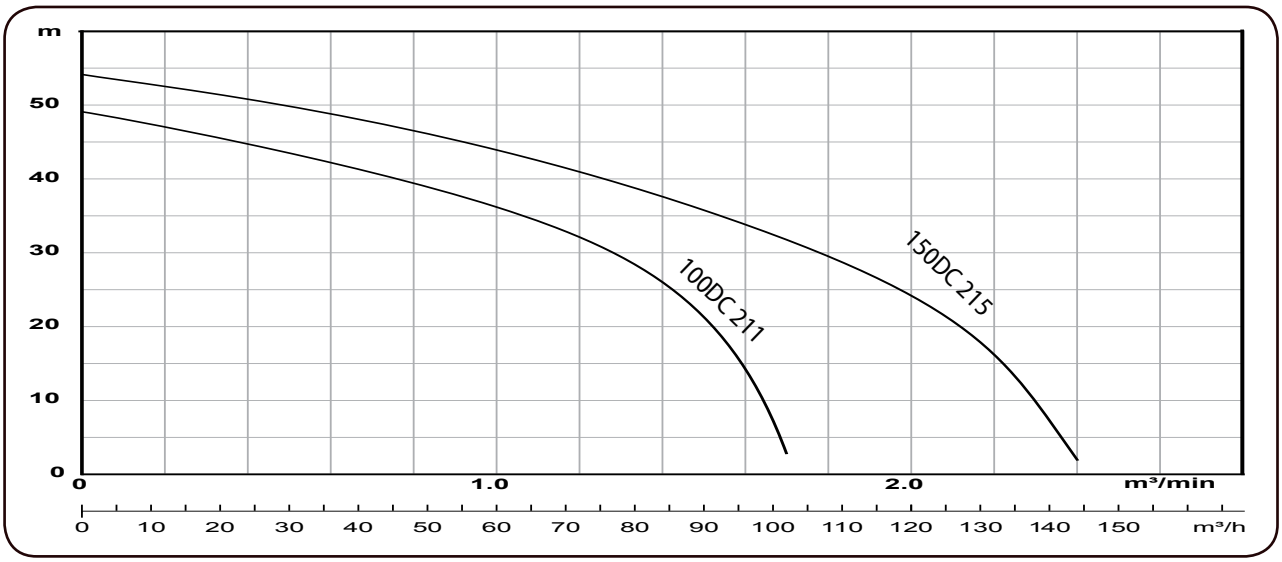

Model	Power HP (KW)	Discharge inch (mm)	Q:m³/min	0.2	0.4	0.6	0.8	1	1.2	1.6	2
			Q:m³/h	12	24	36	48	60	72	96	120
100DC211	15(11)	4" (100)	H (m)	47.5	45	42	39.9	37.8	32.2	16.0	--
150DC215	20(15)	6" (150)		52	50	48	45.7	44	40.4	34.0	24.3

Model	Power HP (kw)	Discharge inch (mm)	Standard m - m³/h	Max m - m³/h	Solid Passage mm	Weight (W/O Cable) 1ø - kg	3ø - kg	Phase	1ø	1ø	3ø	3ø	3ø	3ø	3ø
								Voltage	220V	230V	230V	380V	400V	415V	525V
100DC211	15(11)	4" (100)	60	100	10	--	123	Full Load Ampere	--	--	39.5	22.2	21.8	21.8	17.4
150DC215	20(15)	6" (150)	90	140	10	--	133		--	--	52	29.2	28.6	28.6	22.8

Outlet Connection

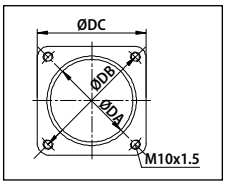

Outlet Base

Model	Dimensions [mm]		
	DA	DB	DC
DC5.5~7.5W	87	127	112

Optional Outlet Accessories

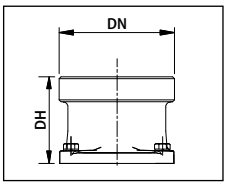

Male Thread Type (LOT)

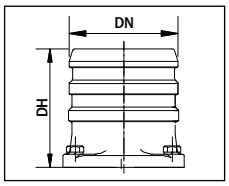

Hose (LOH)

Male Thread	Application Model	Dimensions [mm]	
		DN	DH
LOT4-145	100DC211	100	100
LOT6-145	150DC215	150	150

Male Thread	Application Model	Dimensions [mm]	
		DN	DH
LOH4-145	100DC211	100	120
LOH6-145	150DC215	150	175

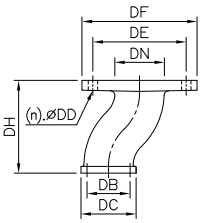

Double Flange Set (LOC)

Male Thread	Application Model	Dimensions [mm]						
		DN	DB	DC	DD	DE	DF	DH
LOC4-175*145	100DC211	100	145	130	15	175	220	200
LOC6-240*145	150DC215	150	145	130	23	240	280	240

Casing Cover

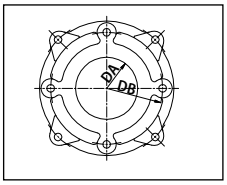

Cassing Cover

Dimensions

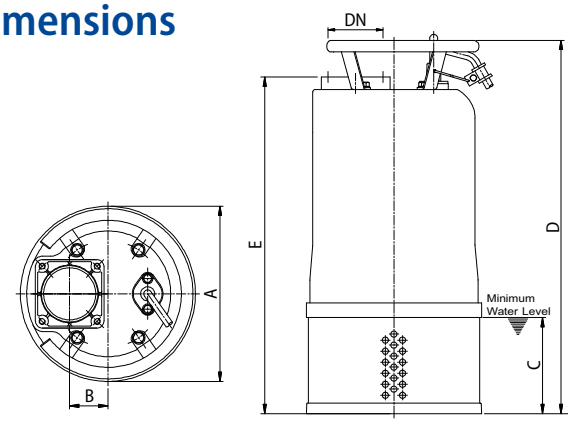

Model	Dimension[mm]					
	DN	A	B	C	D	E
100DC211	100	318	63	130	683	623
150DC215	150	318	63	130	683	623

DA Series • Submersible Slurry Dewatering Pumps

Power: 1.5 ~7.5 kW
Max. Head: 37 m
Max. Capacity: 156 m^3/h

Feature

- Design for civil engineering, light weight for easy portability, double outer casing water cooling motor make it possible to run the pump to low water level.
- Best waterproof structure, automatic rest motor protector and double mechanical seal made of silicon carbide. Durable and leakproof.
- Compact strong design and easy operation in any place.
- Impeller made of high chrome alloy (HiCr) steel with a hardness of 55-60 HRc. harden and abrasion resistant.
- Equipped with a cast iron (FCD)agitator to create powerfull stIring and pumping action for slurry.

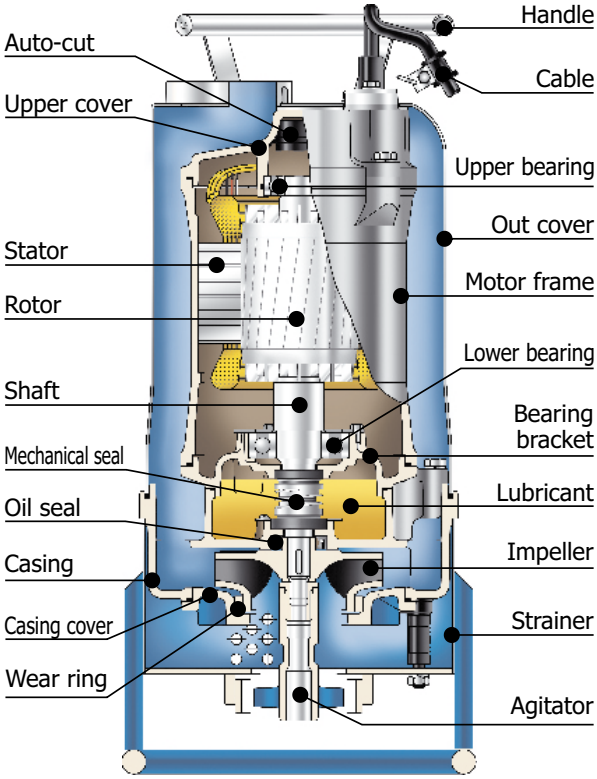

Applications

- Civil engineering, dewatering for tunnel engineering also for manhole sewer.
- Dewatering fluid contain solid sediment.
- Mobile use for contractors, installers and industry.

Definition of model

DA	-	3	2
Type		Discharge inch	HP

100	DA	H	2	7.5
Discharge mm	Type	Impeller Type	Pole	kW

80DAN21.5 • 80DAN22.2 • 80DAN23.7

Specifications

Item		Description
Limits of use	Liquid Temp	0~40°C
	Applications	Construction Sites / Basins Dewatering
	Submersion Depth	100feet (30m)
Type	Frequency	50Hz
	Motor	2P. Dry motor
	Insulation	Class F
	Protection	IP 68
	Protector	Auto-cut
	Bearing	Ball Type
	M.seal	Double M. Seals
	Impeller	Enclosed-channel
Material	Outer Cover	SS304
	Upper Cover	Cast Iron
	Motor Frame	Cast Iron
	Main Shaft	SS403
	M. Seal	Lower: Silicon/Silicon Upper: Carbon /Ceramic
	Casing	Cast Iron
	Impeller	HiCr
	Wear ring	HiCr
	Cable	VCT or H-07RN-F or SJOW/SOW (5HP/230V:SJOW)
Optional		

80DAN21.5

Agitator

N/L Type
Enclosed-chanel Impeller

Performance Curves

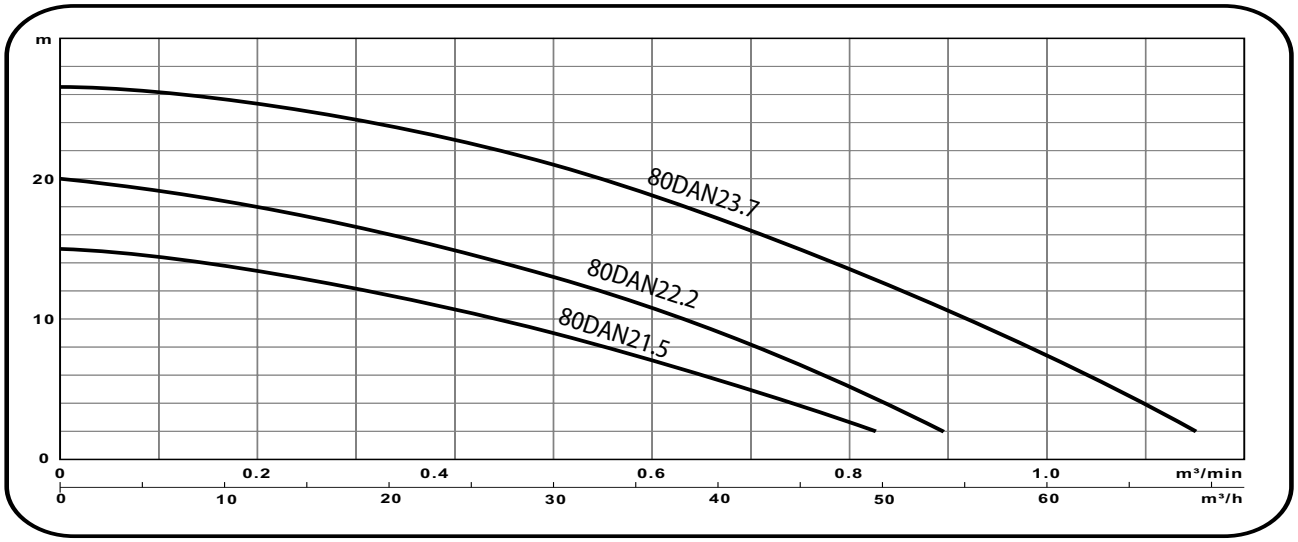

Model	Power HP (kw)	Discharge inch (mm)	Q:m³/min	0.1	0.2	0.3	0.4	0.5	0.6	0.8	1
			Q:m³/h	6	12	18	24	30	36	48	60
80DAN21.5	2 (1.5)	3" (80)	H(m)	14.4	13.4	12.2	10.7	9	7	2.7	--
80DAN22.2	3 (2.2)	3" (80)		19.1	18	16.6	14.9	13	10.8	5.2	--
80DAN23.7	5 (3.7)	3" (80)		26.2	25.4	24.2	22.7	21	18.8	13.5	7.4

Model	Power HP (KW)	Discharge inch (mm)	Standard m - m³/h	Max m - m³/h	Solid Passage mm	Weight (W/O Cable) 1ø - kg	3ø - kg	Phase Voltage	1ø 220V	1ø 230V	1ø 240V	3ø 230V	3ø 380V	3ø 400V	3ø 415V
80DAN21.5	2 (1.5)	3" (80)	9-30	15-54	10	41	36	Full Load Ampere	10.4	10	9.8	6.1	3.6	3.5	3.4
80DAN22.2	3 (2.2)	3" (80)	13-30	20-57	10	45	40		15	14.6	14.6	8.7	5.2	5.1	4.5
80DAN23.7	5 (3.7)	3" (80)	19-36	26.5-72	10	--	45		--	--	--	14.3	8.3	8.3	7.9

Outlet Connection

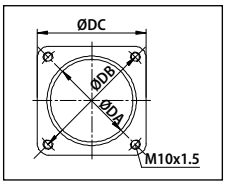

Outlet Base

Model	Dimensions [mm]		
	DA	DB	DC
DC1.5~3.7kW	65	98	89

Optional Outlet Accessories

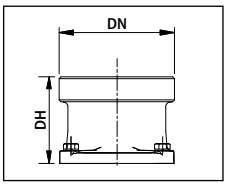

Male Thread Type (LOT)

Male Thread	Application Model	Dimensions [mm]	
		DN	DH
LOT2.5-98	DA1.5~3.7kW	65	80
LOT3-98	DA1.5~3.7kW	80	80

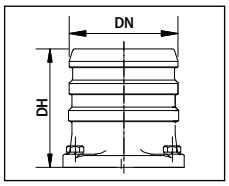

Hose (LOH)

Hose	Application Model	Dimensions [mm]	
		DN	DH
LOH3-98	DA1.5~3.7kW	75	100

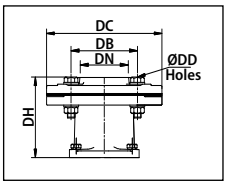

Double Flange Set (LKF • LKTF)

Double Flange Set	Application Model	Dimensions [mm]					Holes
		DN	DB	DC	DD	DH	
LKF3-150*98	DA1.5~3.7kW	80	150	185	15	112	8
LKTF3-145-160*98	DA1.5~3.7kW	80	145 160	195	18 20	112	8

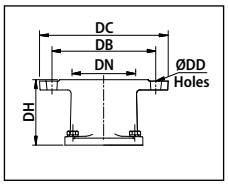

Flange (LOF • LOTF)

Flange	Application Model	Dimensions [mm]					Holes
		DN	DB	DC	DD	DH	
LOF3-150*98	DA1.5~3.7kW	80	150	185	15	80	8
LOTF3-145-160*98	DA1.5~3.7kW	80	145 160	195	18 20	80	8

Dimensions

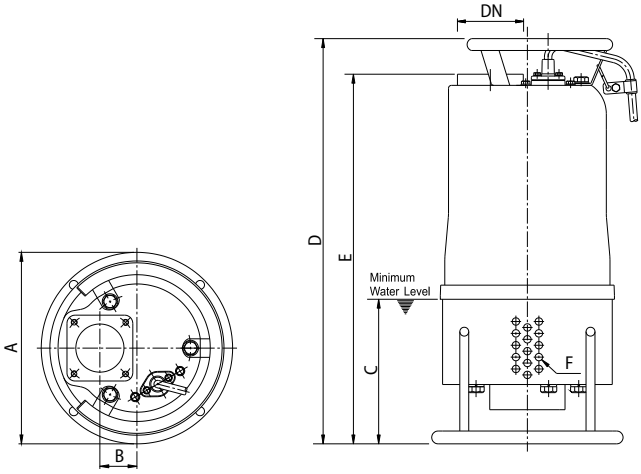

80DAN21.5 • 80DAN22.2 • 80DAN23.7

Model		Dimension[mm]							
	DN	A	B	C	D		E		F
					1ø	3ø	1ø	3ø	
80DAN21.5	80	260	50	195	592	547	544	499	10
80DAN22.2	80	260	50	195	622	547	574	499	10
80DAN23.7	80	260	50	195	--	577	--	529	10

80DAH25.5 • 100DAN25.5 • 100DAN27.5 • 150DAL25.5 • 150DAL27.5

Specifications

Item		Description
Limits of use	Liquid Temp	0~40°C
	Applications	Dewatering Fluid contain solid sediment
	Submersion Depth	100feet (30m)
Type	Frequency	50Hz
	Motor	2P. Dry motor
	Insulation	Class H
	Protection	IP 68
	Protector	Auto-cut
	Bearing	Ball Type
	M.seal	Double M. Seals
	Impeller	Close (80DAH25.5: Open)
Material	Outer Cover	SS304
	Upper Cover	Cast Iron
	Motor Frame	Cast Iron
	Main Shaft	SS304
	M. Seal	Lower: Silicon/Silicon Upper: Carbon /Ceramic
	Casing	Cast Iron
	Impeller	HiCr
	Wear Ring	HiCr
	Agitator	Cast Iron
	Cable	VCT or H-07RN-F or SJOW/SOW (5HP/230V:SJOW)
Optional		

100DAN25.5

150DAL27.5

H Type
Semi-open Impeller

N/L Type
Enclosed-chanel Impeller

Performance Curves

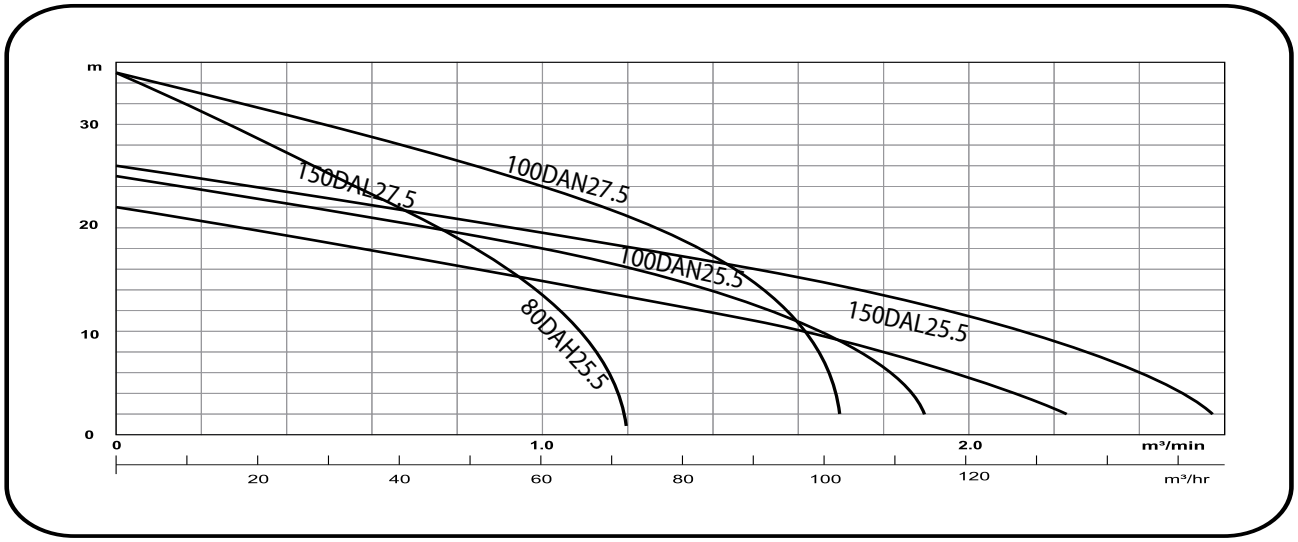

Model	Power HP (KW)	Discharge inch (mm)	Q:m³/min	0.2	0.4	0.6	0.8	1	1.2	1.6	2
			Q:m³/h	12	24	36	48	60	72	96	120
80DAH25.5	7½ (5.5)	3" (80)	H (m)	33.7	29.5	24.4	18	10.3	--	--	--
100DAN25.5	7½ (5.5)	4" (100)		24.4	23.3	21.8	20	18	15.1	7.6	--
100DAN27.5	10 (7.5)	4" (100)		34.2	32.6	30.5	27.5	24	19.1	5.1	--
150DAL25.5	7.5(5.5)	6"(150)		20.8	19.7	18.6	17.5	16.2	14.4	10.1	5.0
150DAL27.5	10 (7.5)	6" (150)		25.5	24	23.5	22.1	20.6	19	15	7

Model	Power HP (kw)	Discharge inch (mm)	Standard m - m³/h	Max m - m³/h	Solid Passage mm	Weight (W/O Cable) 1ø - kg	3ø - kg	Phase	1ø	1ø	1ø	3ø	3ø	3ø	3ø	3ø
								Voltage	220V	230V	240V	230V	380V	400V	415V	525V
80DAH25.5	7½ (5.5)	3" (80)	27-30	37-72	10	--	73	Full Load Ampere	--	--	--	20	11.8	11.6	11	8.8
100DAN25.5	7½ (5.5)	4" (100)	18-60	25-114	10	--	76		--	--	--	20	11.8	11.6	11	8.8
100DAN27.5	10 (7.5)	4" (100)	24-60	35-102	10	--	81		--	--	--	26.4	15.6	15.3	14.5	11.6
150DAL25.5	7.5(5.5)	6"(150)	Nov-90	22-138	10	--	79					20	11.8	11.6	11	8.8
150DAL27.5	10 (7.5)	6" (150)	16-60	26-156	10	--	82		--	--	--	26.4	15.6	15.3	14.5	11.6

Outlet Connection

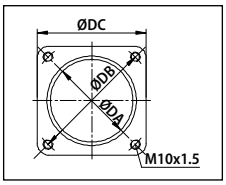

Outlet Base

Model	Dimensions [mm]		
	DA	DB	DC
DA5.5~7.5kW	87	127	112

Optional Outlet Accessories

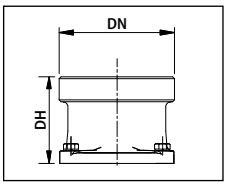

Male Thread Type (LOT)

Male Thread	Application Model	Dimensions [mm]	
		DN	DH
LOT2.5-127	DA5.5~7.5W	65	110
LOT3-127	DA5.5~7.5W	80	85
LOT4-127	DA5.5~7.5W	100	85
LOT6-127	DA5.5~7.5W	150	140

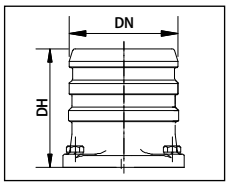

Hose (LOH)

Hose	Application Model	Dimensions [mm]	
		DN	DH
LOH3-127	DA5.5~7.5W	80	110
LOH4-127	DA5.5~7.5W	100	110
LOH6-127	DA5.5~7.5W	150	172

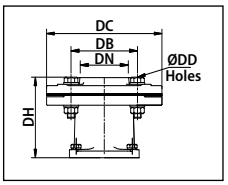

Double Flange Set (LKF • LKTF)

Double Flange Set	Application Model	Dimensions [mm]					Holes
		DN	DB	DC	DD	DH	
LKF3-150*127	DA5.5~7.5kW	80	150	185	15	122	8
LKTF3-145-160*127	DA5.5~7.5kW	80	145 160	195	18 20	117	8
LKTF4-165-190*127	DA5.5~7.5kW	100	165 190	225	18 20	119	8
LKTF6-240*127	DA5.5~7.5kW	150	240	280	23	162	8
LKTF6-240*127	DA5.5~7.5kW	150	240	280	23	162	8

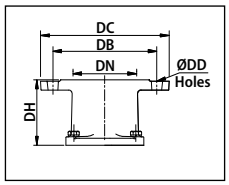

Flange (LOF • LOTF)

Flange	Application Model	Dimensions [mm]					Holes
		DN	DB	DC	DD	DH	
LOF3-150*127	DA5.5~7.5kW	80	150	185	15	90	8
LOTF3-145-160*127	DA5.5~7.5kW	80	145 160	195	18 20	85	8
LOTF4-165-190*127	DA5.5~7.5kW	100	165 190	225	18 20	87	8
LOTF6-240*127	DA5.5~7.5kW	150	240	280	23	120	8

Dimensions

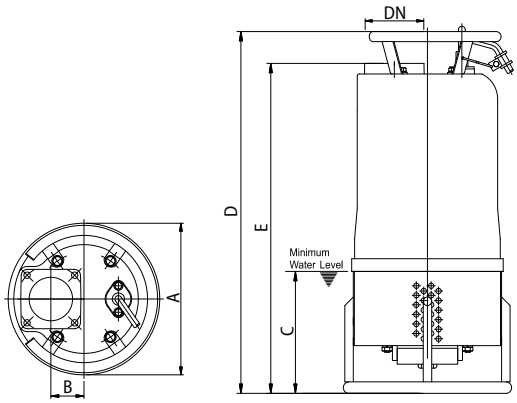

Model	Dimension[mm]					
	DN	A	B	C	D	E
80DAH25.5	80	286	63	200	683	623
100DAN25.5	100	286	63	200	683	623
100DAN27.5	100	286	63	200	683	623
150DAL25.5	150	286	63	200	683	623
150DAL27.5	150	286	63	200	683	623

DW Series • Submersible Dewatering Pumps

Power: 1.1 ~3.7 kW
Max. Head: 39 m
Max. Capacity: 162 m^3/h

Feature

- Standard design incorporating:
  cable and dry motor equipped with thermal AutoCut out to prevent motor from over heating. Abrasion resistant double mechanical seal and additional oil reservoir seal.
- Superior design of water cooled motor to ensure long life operation with high efficiency and energy savings.
- For above or below surface water applications the DW pump strainer can be easily removed and replaced with a check valve, which allows for dewatering of underground water applications.

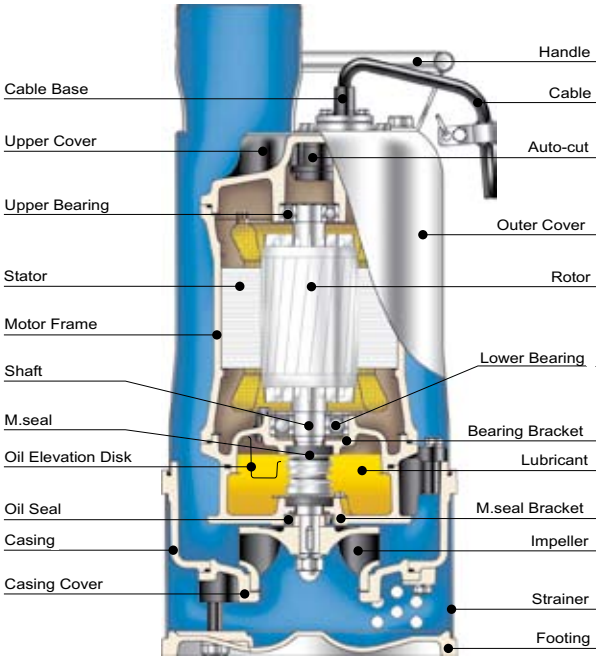

Applications

- Aquaculture water supply and drainage.
- Water supply for agricultural irrigation systems and underground water pumping.
- Landscape, water feature and horticulture irrigation.
- Extraction of water from rivers, lakes and reservoirs.

Definition of model

DW	2	15	F
Type	Discharge Inch	1½ HP	Float

DW	4	3	B
Type	Discharge Inch	HP	Style

DW-215 • DW-32B • DW-33B • DW-43B • DW-45B

Specifications

Item		Description
Limits of use	Liquid Temp.	0~40°C
	Application	Dewatering Fluid Contain Solid Sediment
	Submersion Depth	100feet (30m)
Type	Frequency	50HZ
	motor	2P. Dry motor
	Insulation	Class F
	Protection	IP 68
	Protector	Auto-Cut
	Bearing	Ball Type
	M. Seal	Double M. Seals
	Impeller	Enclosed - channel
Material	Outer cover	SS 304
	Upper Cover	Cast Iron
	Motor Frame	SS304(1.5HP). FC200(2-5HP)
	Main Shaft	SS403(DW-45B: SS304)
	M. Seal	Lower: Silicon/Silicon Uppe: Carbon /Ceramic
	Casing	Cast Iron
	Impeller	Chrome Steel (DC215:BC)
	Cable	VCT or H-07RN-F or SJOW/SOW
Optional		

DW-32B

DW-45B

DW-215

Impeller
Enclosed-chanel Impeller

Performance Curves

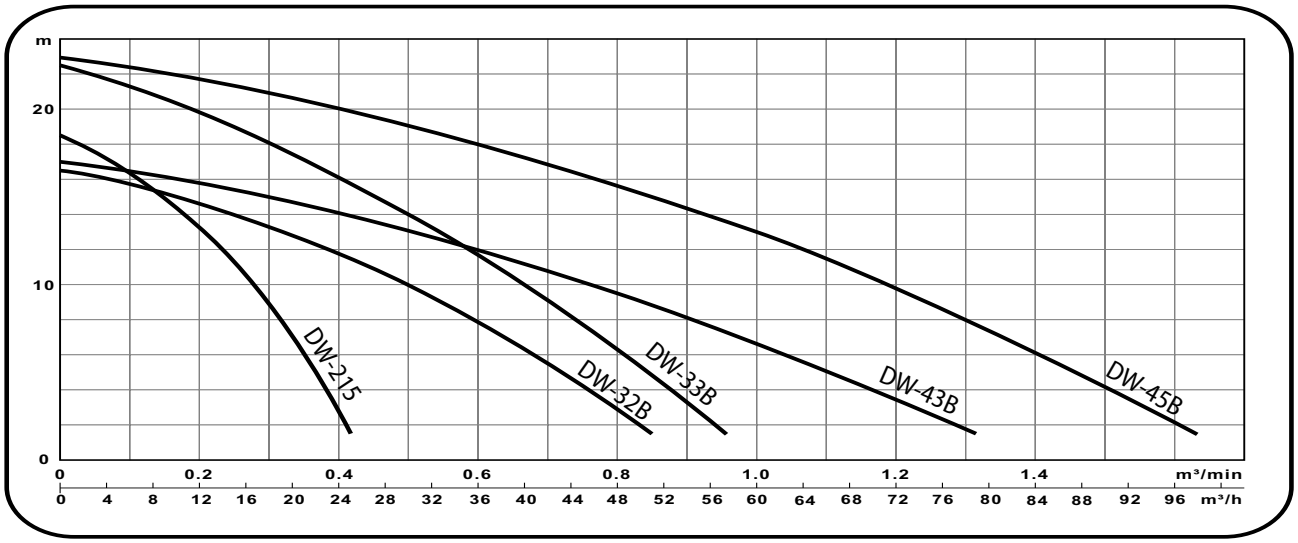

Model	Power HP (KW)	Discharge inch (mm)	Q:m³/min	0.2	0.4	0.6	0.8	1	1.2	1.4	1.6
			Q:m³/h	12	24	36	42	60	72	84	96
DW-215	1½ (1.1)	2" (50)	H (m)	13.5	3.8	--	--	--	--	--	--
DW-32B	2 (1.5)	3" (80)		14.6	11.8	7.8	2.9	--	--	--	--
DW-33B	3 (2.2)	3" (80)		18.8	16.1	11.7	6.3	--	--	--	--
DW-43B	3 (2.2)	3½" (90) 4" (100)		15.8	14.1	12	9.5	6.6	3.4	--	--
DW-45B	5 (3.7)	3½" (90) 4" (100)		21.7	20	18	15.6	13	9.8	6.1	2.3

Model	Power HP (KW)	Discharge inch (mm)	Standard m - m³/h	Max m - m³/h	Solid Passage mm	Weight (W/O Cable) 1ø - kg	3ø - kg	Phase Voltage	1ø 220V	1ø 230V	1ø 240V	3ø 230V	3ø 380V	3ø 400V	3ø 415V
DW-215	1½ (1.1)	2" (50)	13.5 - 12	18.5 - 27	3.5	28	24	Full Load Ampere	8.4	8.2	8	4.9	2.9	2.8	2.7
DW-32B	2 (1.5)	3" (80)	10 - 30	17 - 54	10	40	36		10.4	10	9.8	6.1	3.6	3.5	3.4
DW-33B	3 (2.2)	3" (80)	14 - 30	22.5 - 60	10	45	39		15	14.6	14.6	8.7	5.2	5.1	4.8
DW-43B	3 (2.2)	3½" (90) 4" (100)	9.5 - 48	17 - 84	10	45	39		15	14.6	14.6	8.7	5.2	5.1	4.8
DW-45B	5 (3.7)	3½" (90) 4" (100)	13 - 60	23 - 102	10	--	44		--	--	--	14.3	8.3	8.3	7.9

Outlet Connection

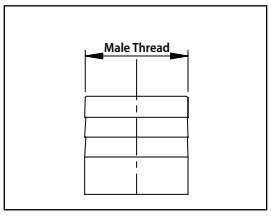

Male Thread

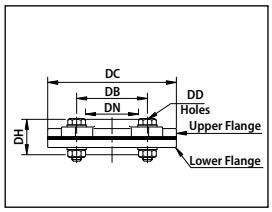

Double Flange Set

Model	mm	Thread Available
DW-32B	80	PF/NPT
DW-33B	80	PF/NPT
DW-43B	90	PF
DW-45B	90	PF
DW-43B	100	PF/PT(8SP.Tr.)/NPT
DW-45B	100	PF/PT(8SP.Tr.)/NPT

Double Flange Set	Application Model	Dimensions[mm]						Holes
		DN	DB1	DB2	DC	DD	DH	
L2F3-145-160	DW-32B	80	145	160	195	18 20	55	8
L2F3-145-160	DW-33B	80	145	160	195	18 20	55	8
L2F4(3.5)-175-180	DW-43B	90	175	180	215	18 20	53	8
L2F4(3.5)-175-180	DW-45B	90	175	180	215	18 20	53	8
L2F4-165-190	DW-43B	100	165	190	225	18 20	59	8
L2F4-165-190	DW-45B	100	165	190	225	18 20	59	8

Dimensions

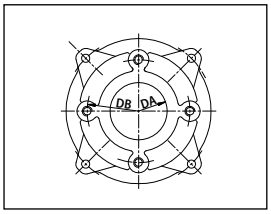

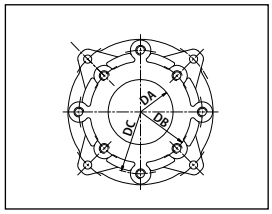

Casing Cover

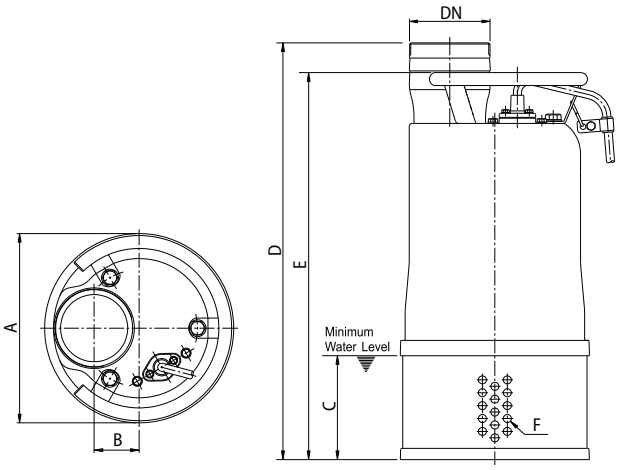

DW-32B • DW-33B • DW-43B • DW-45B

Application Model	Dimensions-mm			
	DA	DB	DC	Drilling
DW-32B	67	125	--	M12
DW-33B	67	125	--	M12
DW-43B	80	125	150	M12
DW-45B	80	125	150	M12

Model	Dimension-mm								
	DN	A	B	C	D		E		F
					1Ø	3Ø	1Ø	3Ø	
DW-32B	80	235	56	115	548	503	511	466	10
DW-33B	80	235	56	115	578	503	541	466	10
DW-43B	90	235	56	130	593	518	556	481	10
DW-45B	100	235	56	130	--	548	--	511	10

DW-48 • DW-410 • DW-68 • DW-610

Specifications

Item		Description
Limits of use	Liquid Temp.	0~40℃
	Application	Dewatering Fluid Contain Solid Sediment
	Submersion Depth	100feet (30m)
Type	Frequency	50HZ
	motor	2P. Dry motor
	Insulation	Class H
	Protection	IP 68
	Protector	Auto-Cut
	Bearing	Ball Type
	M. Seal	Double M. Seals
	Impeller	Enclosed - channel
Material	Outer cover	SS 304
	Upper Cover	Cast Iron
	Motor Frame	Cast Iron
	Main Shaft	SS403
	M. Seal	Lower: Silicon/Silicon Uppe: Carbon /Ceramic
	Casing	Cast Iron
	Impeller	Chrome Steel
	Wear Ring	Chrome Steel
	Cable	VCT or H-07RN-F or SOW
Optional		

DW-610

N Type
Enclosed-chanel Impeller

Performance Curves

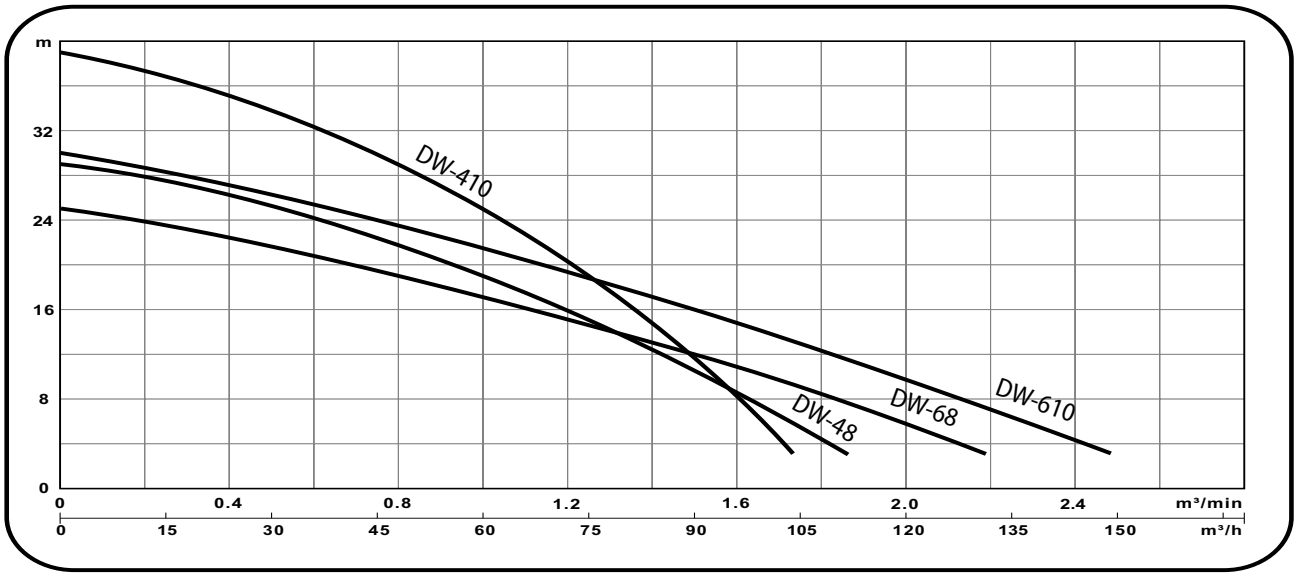

Model	Power HP (KW)	Discharge inch (mm)	Q:m³/min	0.4	0.8	1.2	1.6	1.8	2	2.2	2.4
			Q:m³/h	24	48	72	96	108	120	132	144
DW-48	7½ (5.5)	4" (100)	H (m)	26.2	21.8	15.9	8.6	4.4	--	--	--
DW-68	7½ (5.5)	6" (150)		22.4	19	15.1	10.9	8.5	5.8	2.9	--
DW-410	10 (7.5)	4" (100)		35.1	28.9	20.3	8.3	--	--	--	--
DW-610	10 (7.5)	6" (150)		27.4	24.2	20.4	15.7	12.3	10.4	7.4	4.5

Model	Power HP (KW)	Discharge inch (mm)	Standard m - m³/h	Max m - m³/h	Solid Passage mm	Weight (W/O Cable) 1ø - kg	3ø - kg	Phase Voltage	1ø 220V	1ø 230V	1ø 240V	3ø 230V	3ø 380V	3ø 400V	3ø 415V
DW-48	7½ (5.5)	4" (100)	19 - 60	29 - 120	10	--	75	Full Load Ampere	--	--	--	20	11.8	11.6	11
DW-68	7½ (5.5	6" (150)	12 - 90	25 - 144	10	--	78		--	--	--	20	11.8	11.6	11
DW-410	10 (7.5)	4" (100)	25 - 60	39 - 108	10	--	80		--	--	--	26.4	15.6	15.3	14.5
DW-610	10 (7.5)	6" (150)	17 - 90	30 - 162	10	--	81		--	--	--	26.4	15.6	15.3	14.5

Outlet Connection

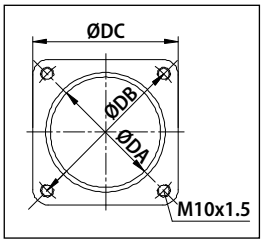

Outlet Base

Model	Dimensions [mm]		
	DA	DB	DC
DW5.5~7.5kW	87	127	112

Optional Outlet Accessories

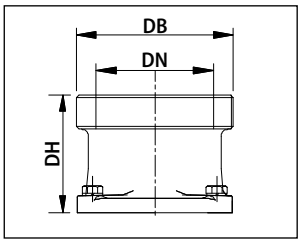

Male Thread Type (LOT)

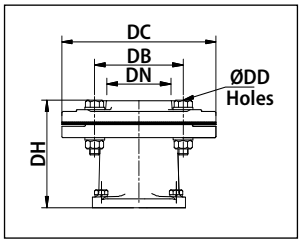

Double Flange Set (LKTF)

Male Thread	Application Model	Dimensions [mm]		
		DN	DB	DH
LOT4-127	DW5.5~7.5kW	100	83	85
LOT6-127	DW5.5~7.5kW	150	145	140

Double Flange Set	Application Model	Dimensions [mm]					Holes
		DN	DB	DC	DD	DH	
LKTF4-165-190*127	DW5.5~7.5kW	100	165	225	18	117	8
LKTF6-240*127	DW5.5~7.5kW	150	240	280	23	162	8
LKTF6-240*127	DW5.5~7.5kW	150	240	280	23	162	8

Dimensions

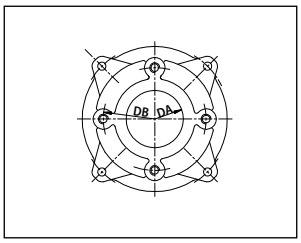

Casing Cover

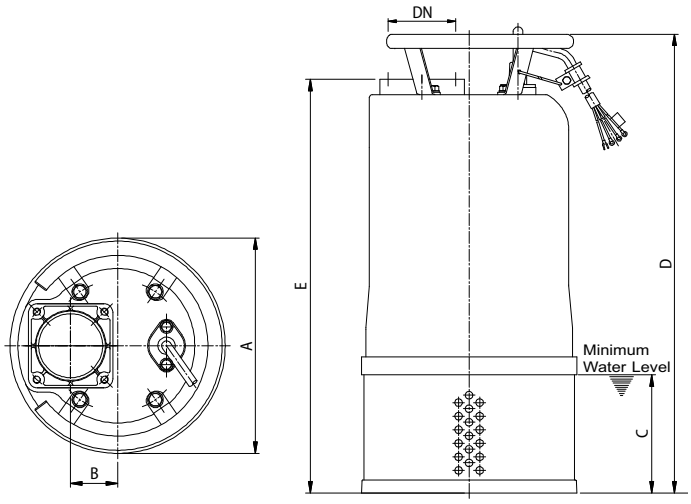

DW-48 • DW-410 • DW-68 • DW-610

Application Model	Dimensions [mm]		Bolt
	DA	DB	
DW-48	87	150	M12 x 25
DW-410	87	150	M12 x 25
DW-68	97	175	M12 x 25
DW-610	97	175	M12 x 25

Model	Dimensions [mm]					
	DN	A	B	C	D	E
DW-48	100	286	63	130	610	550
DW-410	100	286	63	130	610	550
DW-68	150	286	63	130	610	550
DW-610	150	286	63	130	610	550

V Series • High Volume Submersible Pumps

Power: 0.4 ~11 kW
Max. Head: 8 m
Max. Capacity: 540 m^3/h

Feature

- Large flow capacities achieved with almost no vibration or noise by use of Axial & Mix Flow design. Giving easy operation and energy savings.
- Robust construction and compact design with a dry motor, double mechanical seal and impeller flow guide vane for high efficiency.
- Easy handling, energy saving and low maintenance.
- High efficiency motor directly connects to impeller to achieve best energy saving.
- Pump manufactured with heavy duty housing, cable leads are isolated by hardened epoxy for water proofing, double mechanical seal.
- Achieved IP 68 (highest submersible water resistant protection rating), keeps pumps dust free and water proof to provide extended pump life and performance.
- Shaft and impeller are precisely balances for quiet and long life performance.
- 3D computerized design of impeller and vanes conductive design provide highest pump efficiency and stability.
- Casted ALBC3 material (aluminum Bronze) impeller, it has a great abrasion and corrosion resistance.

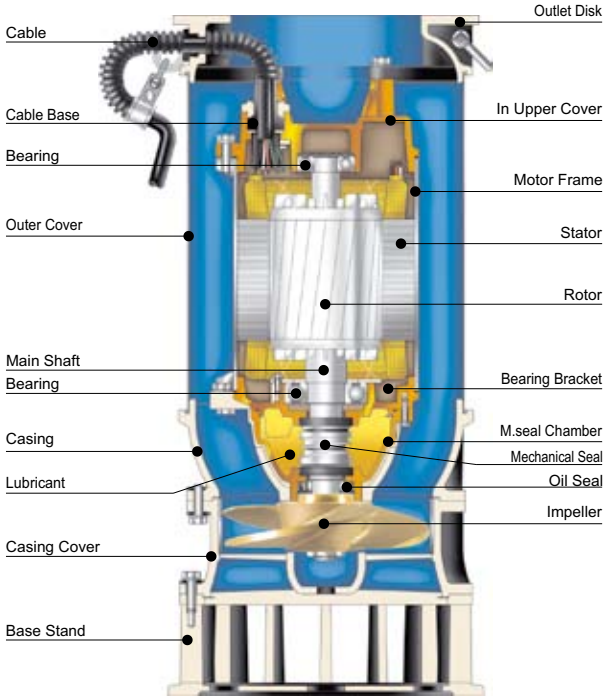

Applications

- Aquaculture water pumping and drainage for large volume water applications.
- Water supply for land scape, water features, cooling in the power plant or drainage for industrial.
- Water extraction from rivers, lakes and reservoirs.
- Flood control or used for large volume dewatering.

Definition of model

V	-	4	-	1
Type		Discharge Inch		HP

V	-	300	A
Type		Discharge Inch	Style

V-405 • V-41 • V-62 • V-63

Specifications

Item		Description
Limits of use	Liquid Temp.	0~40°C
	Application	Agriculture Irrigation Aquiculture Water, River Water
	Submersion Depth	100feet (30m)
Type	Frequency	50Hz
	motor	4P(2-3HP)/ 2P(0.5-1HP) . Dry motor
	Insulation	Class B . (2-5HP) class F
	Protection	IP 68
	Bearing	Ball Type
	M. Seal	Double M. Seals
	Impeller	Axial - Flow
Material	Upper Cover	Cast Iron
	Motor Frame	Cast Iron
	Main Shaft	SS304
	M. Seal	Lower: Silicon/Silicon Uppe: Carbon /Ceramic
	Casing	Cast Iron
	Strainer	SS304
	Impeller	ALBC3
	Cable	VCT or H-07RN-F or SJOW/SOW
Optional		

V-41

V-63

Impeller
Axial-flow Impeller

Performance Curves

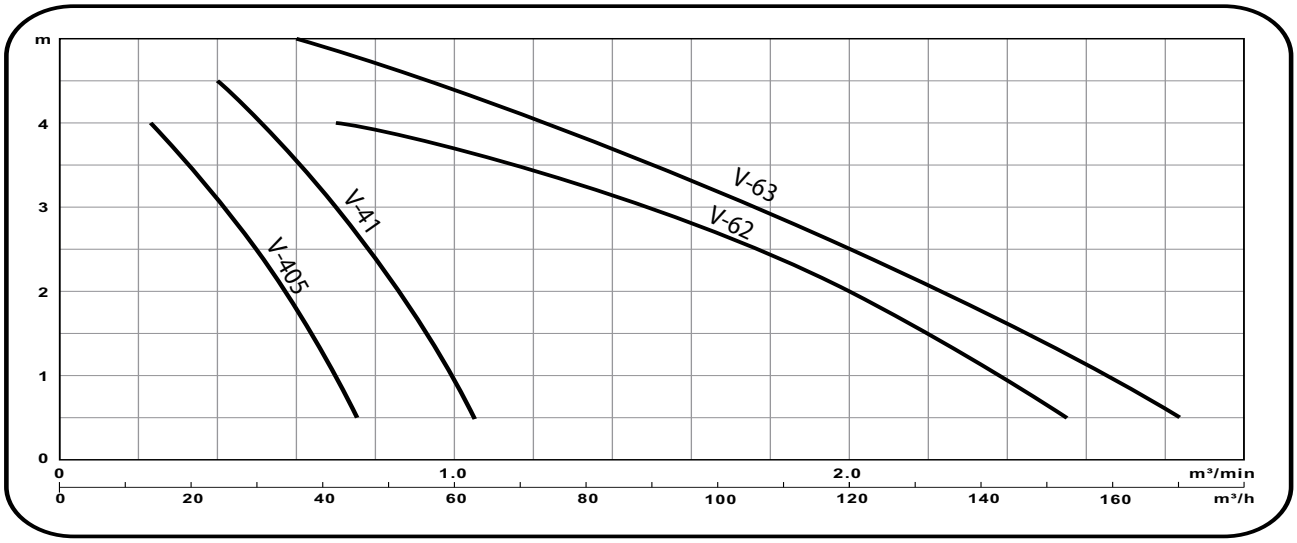

Model	Power HP (kW)	Discharge inch (mm)	Q:m³/min	0.4	0.6	0.8	1	1.6	2	2.6
			Q:m³/h	24	36	48	60	96	120	156
V-405	½ (0.4)	4" (100)	H (m)	3.1	2.1	0.8	--	--	--	--
V-41	1 (0.75	4" (100)		4.5	3.6	2.4	0.9	--	--	--
V-62	2 (1.5)	6" (150)		--	--	3.9	3.7	2.8	2	0.3
V-63	3 (2.2)	6" (150)		--	5	4.7	4.4	3.3	2.5	1.1

Model	Power HP (kw)	Discharge inch (mm)	Standard m - m³/h	Max m - m³/h	Solid Passage mm	Weight (W/O Cable) 1ø - kg	3ø - kg	Phase Voltage	1ø 220V	1ø 230V	1ø 240V	3ø 230V	3ø 380V	3ø 400V	3ø 415V
V-405	½ (0.4)	4" (100)	1.5-42	45	10	25	25	Full Load Ampere	3.8	3.6	3.4	2.3	1.4	1.3	1.3
V-41	1 (0.75)	4" (100)	3 - 42	66	10	26	26		5.4	5.2	5	3.3	2	1.9	1.8
V-62	2 (1.5)	6" (150)	2 - 120	162	20	--	51		--	--	--	6.6	3.9	3.8	3.6
V-63	3 (2.2)	6" (150)	2.5 - 120	180	20	--	52		--	--	--	9.2	5.5	5.4	5.1

Outlet Connection

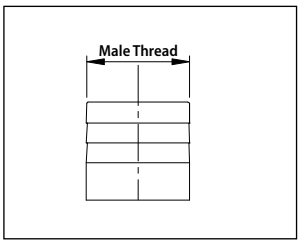

Male Thread

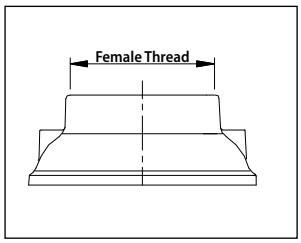

Female Thread

Model	mm	Thread Available
V-405	100	PT(BSP.Tr.)/NPT
V-41	100	PT(BSP.Tr.)/NPT

Model	mm	Thread Available
V-62	150	PS
V-63	150	PS

Optional Accessories

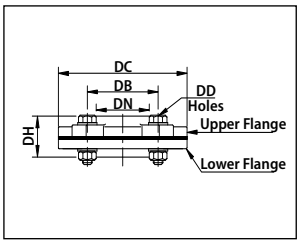

Double Flange Set

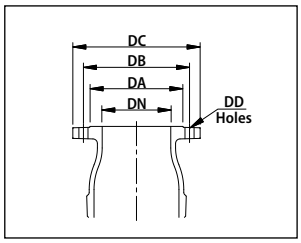

Double Flange Set

Double Flange Set	Application Model	Dimensions[mm]					Holes
		DN	DB	DC	DD	DH	
L2F4(3.5)-175-180	V-405	100	175	215		55	8
L2F4(3.5)-175-180	V-41	100	175	215		53	8
L2F4-165-190	V-41	100	165	225		59	8

Flange	Application Model	Dimensions[mm]					Holes
		DN	DA	DB	DC	DD	
OF4(6)-175	V-62	115	153	175	210	15	4
OF4(6)-175	V-63	115	153	175	210	15	4

Dimensions

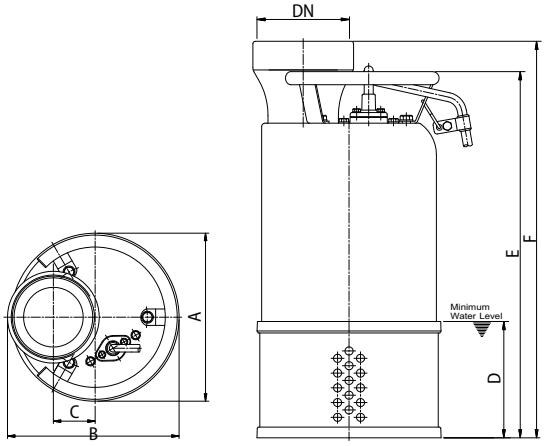

V-305 • V-41

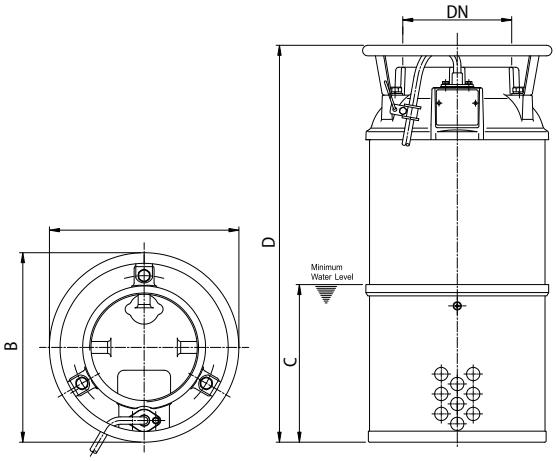

V-62 • V-63

Model	Dimension[mm]						
	DN	A	B	C	D	E	F
V-405	100	225	230	56	180	447	484
V-41	100	225	230	56	180	447	484

Model	Dimension[mm]				
	DN	A	B	C	D
V-62	150	285	285	237	597
V-63	150	285	285	237	597

V-200A • V-250A • V-300A

Specifications

Item		Description
Limits of use	Liquid Temp.	0~40°C
	Application	Agriculture Irrigation Aquiculture Water, River Water
	Submersion Depth	100feet (30m)
Type	Frequency	50Hz
	motor	4P . Dry motor
	Insulation	Class H
	Protection	IP 68
	Bearing	Ball Type
	M. Seal	Double M. Seals
	Impeller	Axial-flow (7.5-10HP) mix-flow (15HP)
Material	Upper Cover	BC6
	Motor Frame	SS304
	Main Shaft	SS304
	M. Seal	Lower: Carbon /Ceramic Uppe: Carbon /Ceramic
	Casing	Cast Iron
	Bearing Bracket	ALBC3
	Cable	VCT or H-07RN-F or SOW
Optional		

V-200A

V-300A

Axial-flow Impeller

Mix-flow Impeller

Performance Curves

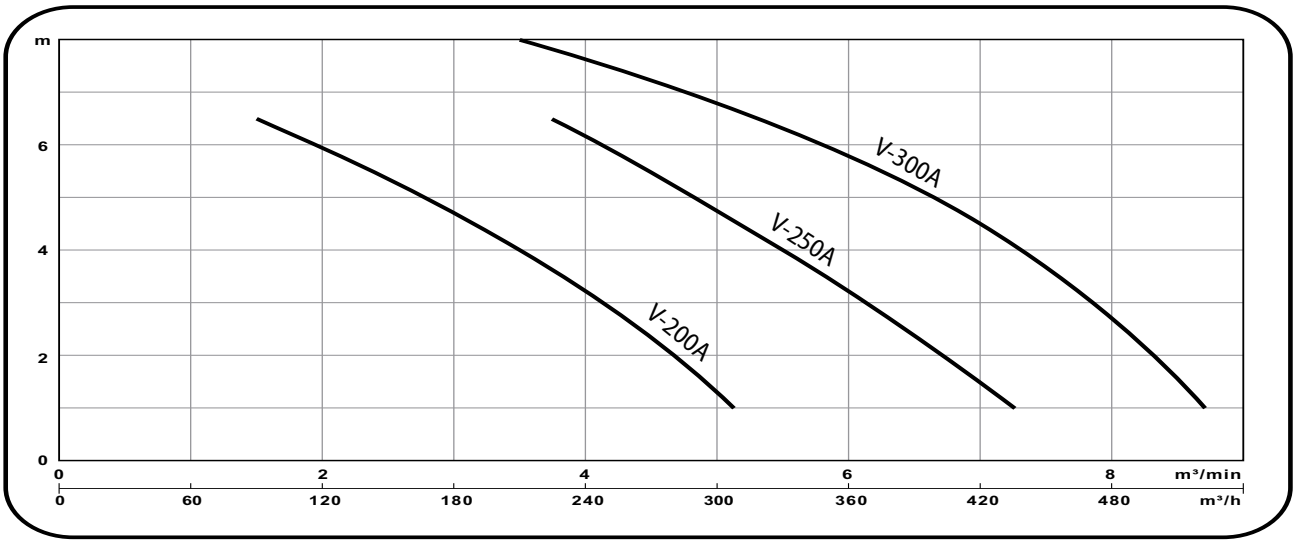

Model	Power HP (kW)	Discharge inch (mm)	Q:m³/min	2	3	4	5	6	7	8
			Q:m³/h	120	180	240	300	360	420	480
V-200A	7.5 (5.5)	8" (200)	H (m)	5.9	4.7	3.2	1.3	--	--	--
V-250A	10 (7.5)	10" (250)		--	--	6.1	4.7	3.2	1.5	--
V-300A	15 (11)	12" (300)		--	--	7.6	6.8	5.8	4.5	2.7

Model	Power HP (kw)	Discharge inch (mm)	Standard m - m³/h	Max m - m³/h	Solid Passage mm	Weight (W/O Cable) 1ø - kg	3ø - kg	Phase Voltage	1ø 220V	1ø 230V	1ø 240V	3ø 230V	3ø 380V	3ø 400V	3ø 415V
V-200A	7.5 (5.5)	8" (200)	4-120	330	22	--	116	Full Load Ampere	--	--	--	21.8	12.7	12.6	12
V-250A	10 (7.5)	10" (250)	4-330	450	22	--	157		--	--	--	27.6	16.2	16	15.2
V-300A	15(11)	12" (300)	4.5-420	540	23	--	201		--	--	--	--	23	22	21

Outlet Connection

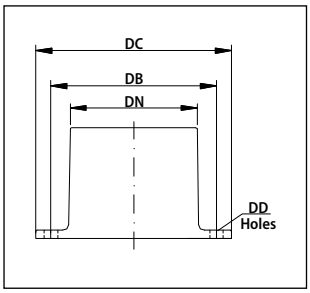

LOP8-285 • LOP10-325

Outlet Set	Application Model	Dimensions[mm]				Holes
		DN	DB	DC	DD	
LOP8-285	V-200A	200	285	330	15	8
LOP10-325	V-250A	250	325	370	15	8

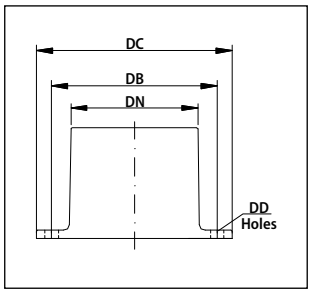

LOP12-430

Outlet Set	Application Model	Dimensions[mm]				Holes
		DN	DB	DC	DD	
OP12-389	V-300A	300	389	430	15	8

Dimensions

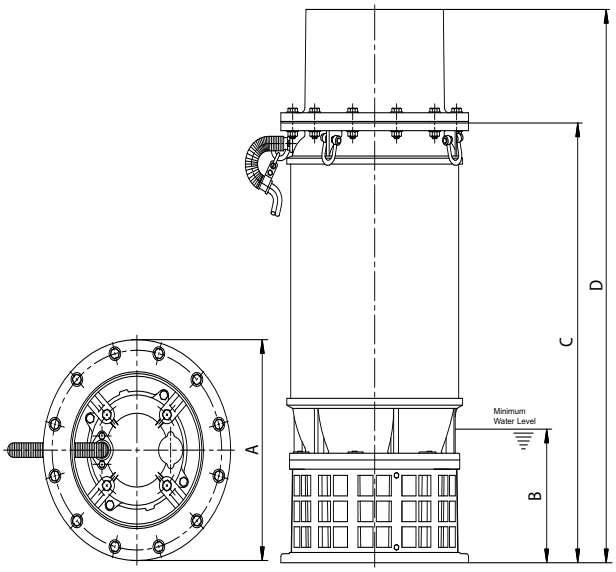

V-200A • V-250A

Model	Dimension[mm]				
	DN	A	B	C	D
V-200A	200	340	250	733	923
V-250A	250	380	300	802	1015

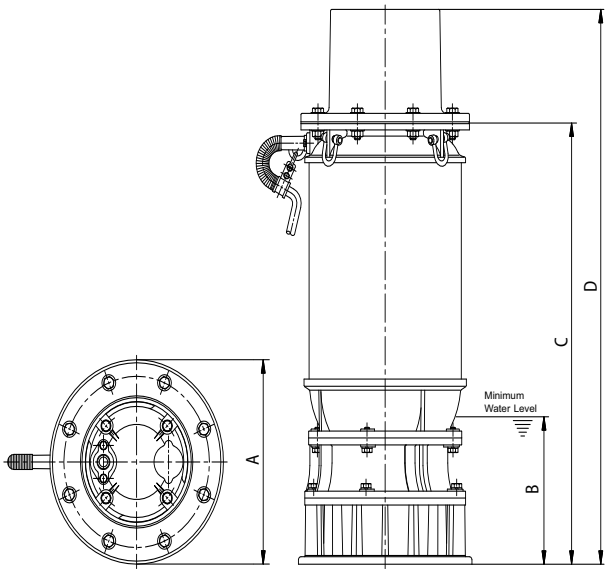

V-300A

Model	Dimension[mm]				
	DN	A	B	C	D
V-300A	300	430	260	856	1077

LA Series • Submersible Axial Pumps

Feature

- High efficiency motor directly connect to impeller for best energy saving.
- Pump manufacture with firm structure, cable lead isolated by harden epoxy for water proof, double mechanical seal, and IP68 dust free and water proof for long period of performance.
- Shaft and impeller is been precisely balance for quiet and long life performance.
- Standard protector: Miniature thermal protector, mechanical seal leakage detector.
  other optional protector device can be apply.
- 3D computerizes impeller and vanes conductive design for higher pump efficiency.

Applications

- Water supply or drainage for industrial.
- Water supply for cooling in the power plant.
- Drainage of waste water treatment.
- Used for large volume dewatering.
- Water supply for agriculture irrigation.
- Others: Extraction of water from dock and river.

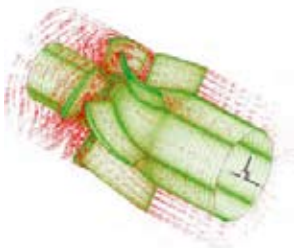

Flow analysis

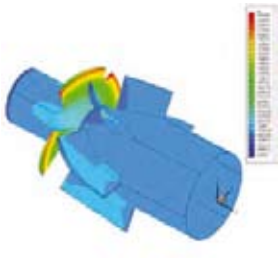

Pressure analysis

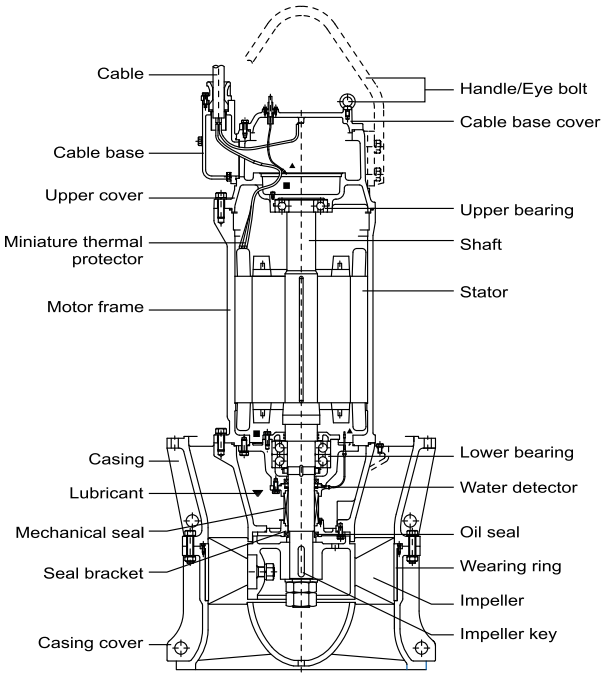

Specifications

Item		Description
Limits of use	Liquid Temp	0 - 40 °C
	Applications	Waste water • industry drainage • Agriculture irrigation • Aquaculture water
	Submersion Depth	100feet (30m)
Type	Frequency	50Hz
	Motor	8P(750rpm: 50-60HP).Dry motor 10P(600rpm: 75-100HP).Dry motor
	Insulation	Class H
	Protection	IP 68
	Protector	MTS-MS
	Bearing	Ball type bearing
	M.seal	Double M.seal
	Impeller	Axial
Material	Upper Cover	Cast Iron
	Casing	Cast Iron
	Impeller	SCS13
	Wear Ring	SCS13(50-60HP)/ALBC3(75-100HP)
	Motor frame	Cast Iron
	Main Shaft	SS420J2
	M.seal	Silicon Carbide
	Cable	VCT or PNCT or H07RN-F
Optional		

Performance Curves

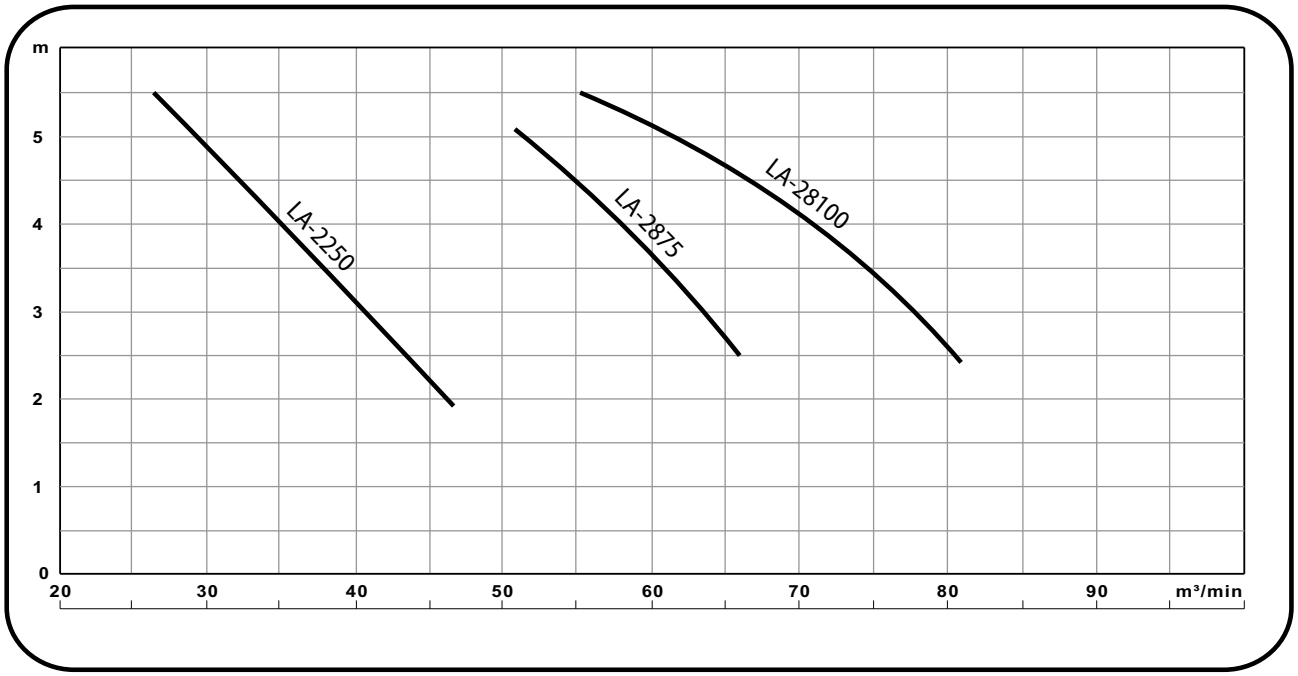

Model	Power HP (kW)	Head m	Discharge inch	Start Method	Capacity m^3/m	Standard Type			Well Type		
						Width	Hight	Weight	Width	Hight	Weight
LA 2250	50 (37)	3/4	22 ~ 24	Y - Δ	40/38	780	1960	1180	780	1300	850
LA 2875	75 (55)	3.5	28	Y - Δ	60	870	2760	2060	870	2150	1530
LA 28100	100 (75)	4	28	Y - Δ	70	870	2760	2130	870	2150	1600

LA-2250

LA-28100

Submersible Axil Pump Station Advantages

- Sample design and construction for pump station.
- Frugal space easier installing and maintaining.
- Reduce pump station construction and installation expense.

Protector Description (Optional)

- **MTP (Miniature Thermal Protector):**
  Motor winding and bearing bracket can be embed with MTP to prevent motor operating in dry or unusual condition cause motor over heating.
- **WD (Water Detector):**
  Mechanical Seal chamber, motor chamber, and wiring chamber can be installing WD to prevent water enterning in case failure.

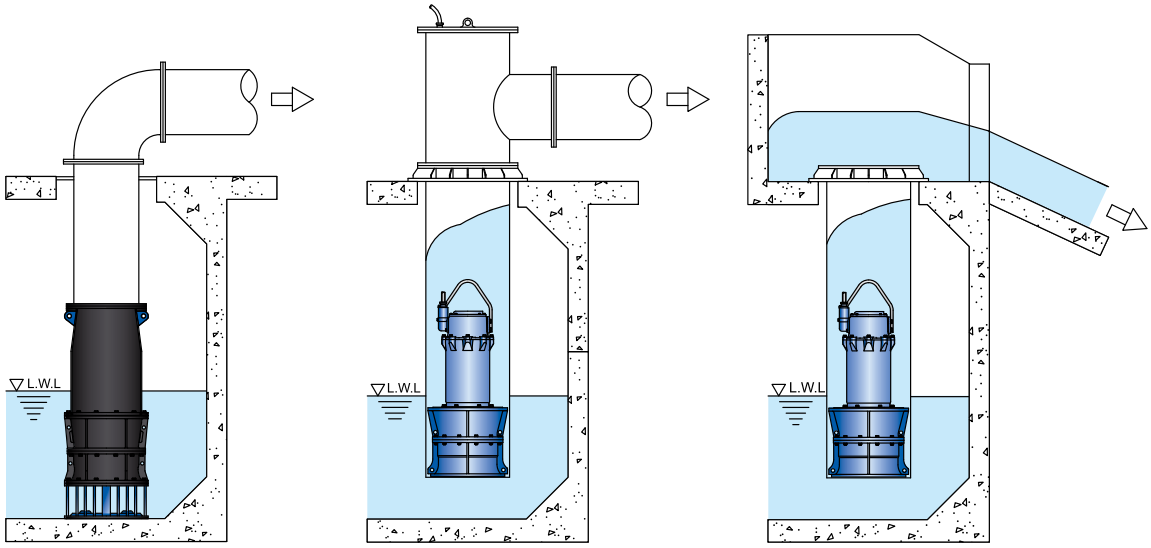

Stand type (pipe connect) Well type (pipe connect) Well type (Open flow)

If the insufficient shape and dimension of the suction flow zone are adopted at the designe stage, and from hydro-dynamical point of view there are serve serious problems might arise. Especially eddy current of the surfa, water, air mixing with water, heavy turbulence of water flow and the formation of stagnant zone. In order to prevent to reduce such causes of the problems there are sever things need to considered.

- The liquid of suction flow speed should be kept constant (flow speed 0.3 - 0.5m/s.
- Suction flow zone of water depth and floor slop varison of slope angle should be 30 - 45
- Suction flow zone should filling up with concrete.
- In case of two pumps operation, any sudden obstacles at the suction flow zone must be avoided and maximum diveregent angle must not more than 20 .

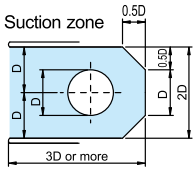

In case of one pump operation

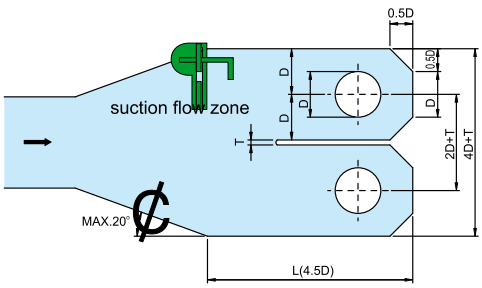

In case of two pumps operation

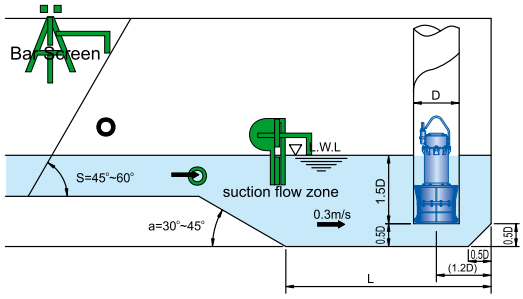

In case of eddy current protection device equipped

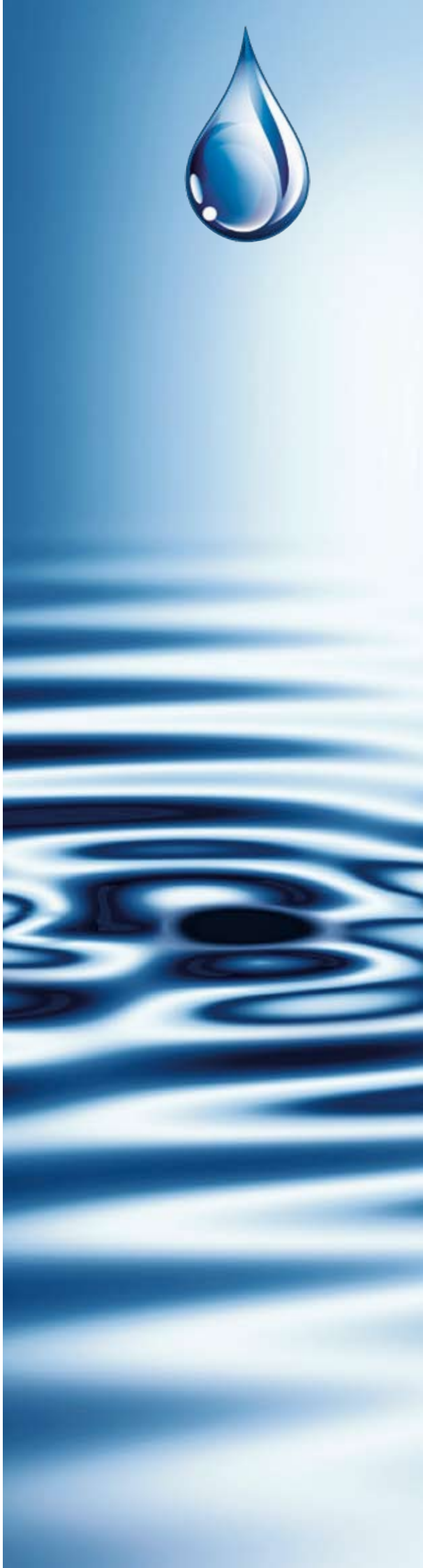

Swiss Pump Company AG
Moosweg 36
CH - 3645 Thun - Gwatt
Switzerland
Tel. +41 33 223 11 00
Fax +41 33 223 11 22
mail@swisspump.com

www.swisspump.com